Traffic Impact Study

for the proposed

Multifamily Project

4819 Southwestern Boulevard
Town of Hamburg
Erie County, New York

May 2015

Project No. 35025

Prepared For:

Hanania Family Partnership LP
c/o Anthony Cutaia
1325 Millersport Highway, Suite 209
Williamsville, NY 14221

Prepared By:

SRF ASSOCIATES
WWW.SRFA.NET
Transportation Engineering & Planning Consultants

3495 Winton Place
Building E, Suite 110
Rochester, New York 14623

TABLE OF CONTENTS

LIST OF TABLES ii
LIST OF FIGURES ii
LIST OF APPENDICES ii
LIST OF REFERENCES ii
EXECUTIVE SUMMARY iii

I. INTRODUCTION 1
II. LOCATION 1
III. EXISTING HIGHWAY SYSTEM 1
IV. EXISTING TRAFFIC CONDITIONS 2
A. Peak Intervals for Analysis 2
B. Existing Traffic Volume Data 2
C. Field Observations 2
D. Accident History 3

V. FUTURE AREA DEVELOPMENT AND LOCAL GROWTH 4
VI. PROPOSED DEVELOPMENT 4
A. Description 4
B. Site Traffic 5
C. Site Traffic Distribution 5

VII. FULL DEVELOPMENT VOLUMES 6
VIII. CAPACITY ANALYSIS 6
IX. LICENSE PLATE SURVEY 8
X. CONCLUSIONS & RECOMMENDATIONS 9
XI. FIGURES 9

LIST OF TABLES

TABLE I INTERSECTION ACCIDENT RATES 3
TABLE II PROJECTED TRIP GENERATION 5
TABLE III CAPACITY ANALYSIS RESULTS 7

LIST OF FIGURES

FIGURE 1 SITE LOCATION & STUDY AREA
FIGURE 2 LANE GEOMETRY & AVERAGE DAILY TRAFFIC
FIGURE 3 PEAK HOUR VOLUMES – 2015 EXISTING CONDITIONS
FIGURE 4 PEAK HOUR VOLUMES – 2017 BACKGROUND CONDITIONS
FIGURE 5 CONCEPT SITE PLAN
FIGURE 6 TRIP DISTRIBUTION
FIGURE 7 SITE GENERATED TRIPS
FIGURE 8 PEAK HOUR VOLUMES – FULL DEVELOPMENT CONDITIONS

LIST OF APPENDICES

A1. COLLECTED TRAFFIC VOLUME DATA
A2. MISCELLANEOUS TRAFFIC DATA AND CALCULATIONS
A3. LOS CRITERIA/DEFINITIONS
A4. LEVEL OF SERVICE CALCULATIONS – EXISTING CONDITIONS
A5. LEVEL OF SERVICE CALCULATIONS – BACKGROUND CONDITIONS
A6. LEVEL OF SERVICE CALCULATIONS – FULL DEVELOPMENT CONDITIONS

LIST OF REFERENCES

1. HCM 2010 Highway Capacity Manual. Transportation Research Board. The National Academies, Washington, DC: 2010.
2. Trip Generation, Ninth Edition. Institute of Transportation Engineers. Washington, DC. 2012.
3. Highway Database. Greater Buffalo-Niagara Regional Transportation Council (GBNRTC). 2015.

EXECUTIVE SUMMARY

OVERVIEW

The purpose of this report is to identify and evaluate the potential traffic impacts associated with the proposed Multifamily Project ("Proposed Project") in the Town of Hamburg, Erie County, New York. The project site is located at 4819 Southwestern Boulevard. This Traffic Impact Study ("TIS") has also been prepared to provide the Town of Hamburg and involved agencies with information to allow the evaluation of potential traffic impacts in connection with the required environmental review of the proposed project pursuant to the State Environmental Quality Review Act ("SEQRA"). Within this report, the operating characteristics of the proposed access point and impacts to the adjacent roadway network are identified and evaluated.

In an effort to define traffic impact, this analysis establishes existing traffic conditions, projects background traffic flow including area growth with consideration of the proposed Sherwood Residential Development on Howard Road, and determines the traffic operations that would result from the Proposed Project.

The layout of the proposed residential project consists of 130 upscale apartment units housed in five three-story buildings with 26 units per building. Access to the project site will be provided via an improved driveway connection to the existing traffic signal on Southwestern Boulevard, at a location opposite of Howard Road. The project site is situated on the south side of Southwestern Boulevard at the intersection with Howard Road in the Town of Hamburg, Erie County, New York. The project site is bounded by Southwestern Boulevard and commercial development to the north, Gullo's Garden Center to the east, residential development to the south, and commercial development to the west. The project site was a former golf driving range.

Construction of the proposed residential project is anticipated to reach full build-out in approximately two (2) years or less. The Town of Hamburg was contacted to discuss any other specific developments that are currently approved or under construction that would generate additional traffic in the study area. One residential development that is pending (Sherwood Residential Subdivision) was identified along Howard Road to the north of the project site. Additional traffic related to the proposed Sherwood Residential Subdivision is included in the ambient growth for traffic in the study area. To account for any background growth in the area aside from these specific developments, a 0.5% per year growth rate has been applied to existing traffic volumes at the study area intersections for the two year build-out period. This growth rate was determined based upon historical traffic volumes in the area determined via the Greater Buffalo-Niagara Regional Transportation Council traffic data.

The operating characteristics of the site access driveways and impacts to the adjacent roadway network are identified and evaluated in this report, and mitigating measures, if any, are described to minimize any capacity or safety concerns.

CONCLUSIONS & RECOMMENDATIONS

This TIS identifies and evaluates the potential traffic impacts that can be expected from the proposed Multifamily Project in the Town of Hamburg as described in this Study. Our firm's comprehensive analysis indicates that the existing transportation network can adequately accommodate the projected traffic volumes and resulting impacts to study area intersections. The following sets forth our firm's conclusions and recommendations based upon the results of the analyses:

1. The proposed residential project is expected to generate approximately 13 entering/54 exiting AM peak hour trips and 58 entering/31 exiting PM peak hour trips

2. The proposed project will not result in any potentially significant adverse traffic impacts to the study area intersections.

3. The proposed driveway at Southwestern Boulevard should consist of one exiting lane (combined left/right turn lane) and one entering lane.

4. It is our firm's professional opinion that the information contained in this TIS provides the Town of Hamburg with the necessary information to determine that the project will not result in any significant traffic impacts in connection with its issuance of a determination pursuant to the State Environmental Quality Review Act ("SEQRA").

I. INTRODUCTION

The purpose of this report is to identify and evaluate the potential traffic impacts associated with the proposed Multi-Family Development ("Proposed Project") in the Town of Hamburg, Erie County, New York. This Traffic Impact Study ("TIS") has also been prepared to provide the Town of Hamburg and involved agencies with information to allow the evaluation of potential traffic impacts in connection with the required environmental review of the proposed project pursuant to the State Environmental Quality Review Act ("SEQRA"). Within this report, the operating characteristics of the proposed access point and impacts to the adjacent roadway network are identified and evaluated.

In an effort to define traffic impact, this analysis establishes existing traffic conditions, projects background traffic flow including area growth with consideration of the proposed Sherwood Residential Development on Howard Road, and determines the traffic operations that would result from the proposed project.

II. LOCATION

The project site is situated on the south side of Southwestern Boulevard at the signalized intersection with Howard Road in the Town of Hamburg, Erie County, New York. The project site is bounded by Southwestern Boulevard and commercial development to the north, Gullo's Garden Center to the east, residential development to the south, and commercial development to the west. The project site was a former golf driving range. The study area consists of the two existing intersections of Howard Road with Southwestern Boulevard/Proposed Driveway and Camp Road/Queens Lane. The site location and study area are illustrated in **Figure 1** - Site Location & Study Area (all Figures are included at the end of this report).

III. EXISTING HIGHWAY SYSTEM

Southwestern Boulevard (US 20) is a northeast-southwest roadway that is functionally classified as a principal arterial roadway and is owned and maintained by the New York State Department of Transportation ("NYSDOT"). Annual Average Daily Traffic ("AADT") on this segment of Southwestern Boulevard is approximately 25,309 vehicles per day ("vpd") according to the most recent data collected in 2013 by the Greater Buffalo-Niagara Regional Transportation Council ("GBNRTC"). The highway generally consists of two travel lanes in each direction, a center two-way left-turn lane, auxiliary lanes at the study area intersection, and a posted speed limit of 45 miles per hour ("MPH").

Howard Road is generally an east-west (northwest-southeast at the study area intersection with Southwestern Boulevard) roadway that is functionally classified as a local roadway. The AADT is approximately 2,930 vpd according to the most recent data collected in 2013 by the GBNRTC. The highway generally consists of one travel lane in

each direction, auxiliary lanes at the study area intersection with Camp Road, and a posted speed limit of 30 MPH. It should be noted that although Howard Road at Southwestern Boulevard is striped as one lane entering and one lane exiting, field observations recorded vehicles stacking side-by-side when exiting Howard Road. A capacity of a single vehicle was observed being able to queue next to another stored vehicle waiting to turn out of Howard Road.

Camp Road (NYS Route 75) is a north-south roadway that is functionally classified as a principal arterial roadway and is owned and maintained by the NYSDOT. The AADT on this segment of Camp Road is approximately 23,040 vpd according to the most recent data collected in 2013 by the GBNRTC. The highway generally consists of two travel lanes in each direction, a center two-way left-turn lane, auxiliary lanes at the study area intersection, and a posted speed limit of 45 MPH.

Existing AADT information was obtained from the GBNRTC website. **Figure 2** illustrates the lane geometry at each of the study intersections and the AADT volumes on the study roadways.

IV. EXISTING TRAFFIC CONDITIONS

A. Peak Intervals for Analysis

Given the functional characteristics of the corridors and the land use proposed for the site (apartments), the peak hours selected for analysis are the weekday AM and PM commuter peaks. The combination of site traffic and adjacent through traffic produces the greatest demand during these time periods.

B. Existing Traffic Volume Data

Turning movement traffic counts were obtained on Tuesday, April 14, 2015, by SRF & Associates (SRF) at the study intersections of Howard Road with Southwestern Boulevard/Proposed Driveway and Camp Road/Queens Lane. Traffic counts were conducted between 7:00-9:00 AM and 4:00-6:00 PM for the weekday morning and evening peak hours. The data indicates that during these periods, the peak hours of traffic at the study intersection are generally 7:15-8:15 AM and 4:30-5:30 PM. The existing weekday AM and PM peak hour volumes are shown in **Figure 3**.

C. Field Observations

The study intersections were observed during both peak intervals to assess current traffic operations. Signal timing information was collected to determine peak hour phasing plans and phase durations during each interval. Additionally, a license plate survey was performed at the two study area intersections to document the non-local traffic traveling between Camp Road and Southwestern Boulevard on Howard Road.

D. *Accident History*

The accident history at the study area intersection of Howard Road with Southwestern Boulevard/Proposed Driveway and Camp Road/Queens Lane was identified from August 2011 through July 2014. The data was provided by the NYSDOT through a Freedom of Information request.

A total of seventeen accidents were documented during the investigation period (approximately three years) at the study area intersection noted above. The severity of the accidents is as follows:

- 8 Reportable – Injury
- 9 Reportable – Non-injury

Accident rates were computed for the project study intersection and compared with NYSDOT average accident rates for similar intersections, as summarized in **Table I**. Intersection rates are listed as accidents per million entering vehicles (Acc/MEV).

TABLE I
INTERSECTION ACCIDENT RATES

INTERSECTION	*NUMBER OF ACCIDENTS*	*ACTUAL PROJECT RATE ACC/MEV*	*NYSDOT AVERAGE RATE ACC/MEV*
Southwestern Blvd/Howard Rd	12	0.45	0.21
Howard Rd/Camp Rd/Queens Ln	5	0.19	0.14

The intersection accident rates are higher than the statewide average accident rate for similar intersections at both of the study intersections of Howard Road at Camp Road and Southwestern Boulevard.

Southwestern Boulevard/Howard Road
Of the 12 total accidents at Southwestern Boulevard/Howard Road, six were associated with rear-end collisions (three – westbound; one – northbound; one-eastbound; one – unknown). There was one "other" classified accident that may be a rear-end crash as the three vehicles associated with the incident were travelling southbound on Howard Road. However, based on the information recorded by the Town of Hamburg Police Department, this event is not being counted as a rear-end collision.

The remaining accidents were as follows: one left-turn (eastbound), one overtaking (westbound), one head-on (eastbound), and one pedestrian incident. The pedestrian event was described as, "alcohol involvement, pedestrian's error/confusion." No citations were issued as a result of this incident. Based

upon the accident details of the rear-end collisions, these types of accidents are more common at traffic signals on high volume roadways. Recommended mitigation countermeasures may include optimizing the change intervals at the traffic signals (to increase the length of time between phase intervals) and/or improving the visibility of the signals (e.g., contrasting backplate with retroreflective borders on signal head).

Southwestern Boulevard/Howard Road

Of the five total accidents, two were associated with right-angle collisions (two – westbound). The remaining accidents were as follows: one left-turn (westbound), one overtaking (southbound), and one fixed object (southbound). There are no discernible patterns as a result of the accident history at the study intersection. No mitigation is warranted or recommended.

V. FUTURE AREA DEVELOPMENT AND LOCAL GROWTH

Construction of the proposed residential project is anticipated to reach full build-out in approximately two (2) years or less. The Town of Hamburg was contacted to discuss any other specific developments that are currently approved or under construction that would generate additional traffic in the study area. One residential development that is approved (Sherwood Residential Development) was identified along Howard Road immediately to the north of the proposed development. Additional traffic related to this development is included in the ambient growth for traffic in the study area. To account for any background growth in the area aside from these specific developments, a 0.5% per year growth rate has been applied to existing traffic volumes at the study area intersections for the two year build-out period. This growth rate was determined based upon historical traffic volumes in the area determined via the GBNRTC traffic data. Future background traffic volumes are shown in **Figure 4**.

VI. PROPOSED DEVELOPMENT

A. Description

The project site is situated on the south side of Southwestern Boulevard at the intersection with Howard Road in the Town of Hamburg, Erie County, New York. The project site is bounded by Southwestern Boulevard and commercial development to the north, Gullo's Garden Center to the east, residential development to the south, and commercial development to the west. The project site was a former golf driving range.

The layout of the proposed residential project consists of 130 apartment units housed within five buildings. Access to the project site will be provided via an improved driveway connection to Southwestern Boulevard at the existing traffic signal opposite Howard Road. **Figure 5** illustrates the proposed Concept Plan.

B. *Site Traffic*

The volume of traffic generated by a site is dependent on the intended land use and size of the development. Trip generation is an estimate of the number of trips generated by a specific building or land use. These trips represent the volume of traffic entering and exiting the development. Trip Generation, 9th Edition is used as a reference for this information. The trip rate for the peak hour of the generator may or may not coincide in time or volume with the trip rate for the peak hour of adjacent street traffic. Volumes generated during the peak hour of adjacent street traffic, in this case, the weekday AM and PM peaks, represent a more critical volume when analyzing the capacity of the system; those intervals will provide the basis of this analysis. All trip generation information has been included in the appendix. **Table II** shows the total site generated trips for the weekday AM and PM peak hours for the proposed residential project.

TABLE II
PROJECTED TRIP GENERATION

DESCRIPTION	AM PEAK		PM PEAK	
	ENTER	EXIT	ENTER	EXIT
130 Apartment units	13	54	58	31

C. *Site Traffic Distribution*

The cumulative effect of site traffic on the transportation network is dependent on the origins and destinations of that traffic and the location of the driveways serving the site.

The proposed arrival/departure distribution of traffic to be generated at this site is considered a function of several parameters, including the following:

- Location of employment centers in the area;
- Location of commercial centers in the area;
- Location of proposed driveway access;
- Existing highway network;
- Existing traffic conditions and controls; and
- Existing travel patterns throughout the study area

Figure 6 shows the anticipated trip distribution pattern percentages for the proposed apartment development traffic and **Figure 7** illustrates the peak hour site generated traffic based on those percentages.

VII. FULL DEVELOPMENT VOLUMES

Proposed design hour traffic volumes are developed for each peak by combining the background traffic conditions (Figure 4) and the new site-generated traffic volumes (Figures 7) to yield the traffic volumes under full development conditions. The resulting design hour volumes for the proposed development are illustrated in **Figure 8** under full build-out conditions.

VIII. CAPACITY ANALYSIS

Capacity analysis is a technique used for determining a measure of effectiveness for a section of roadway and/or intersection based on the number of vehicles during a specific time period. The measure of effectiveness used for the capacity analysis is referred to as a Level of Service ("LOS"). Levels of Service are calculated to provide an indication of the amount of delay that a motorist experiences while traveling along a roadway or through an intersection. Since the most amount of delay to motorists usually occurs at intersections, capacity analysis typically focuses on intersections, as opposed to highway segments.

Six Levels of Service are defined for analysis purposes. They are assigned letter designations, from "A" to "F", with LOS "A" representing the best conditions and LOS "F" the worst. Suggested ranges of service capacity and an explanation of Levels of Service are included in the Appendix.

The standard procedure for capacity analysis of signalized and un-signalized intersections is outlined in the Highway Capacity Manual ("HCM 2010") published by the Transportation Research Board. Traffic analysis software, SYNCHRO 8, which is based on procedures and methodologies contained in the HCM, was used to analyze operating conditions at study area intersections. The procedure yields a Level of Service ("LOS") based on the HCM 2010 as an indicator of how well intersections operate.

Existing and background operating conditions during the peak study periods are evaluated to determine a basis for comparison with the projected future conditions. The future traffic conditions generated by the proposed development were analyzed to assess the operations of the intersections in the study area. Capacity results for existing, background, and full build-out conditions are listed in **Table III**. The discussion following the table summarizes capacity conditions. All capacity analysis calculations are included in the Appendix.

TABLE III
CAPACITY ANALYSIS RESULTS

Intersection	Existing Conditions		Background Conditions		Full Development Conditions	
	AM	PM	AM	PM	AM	PM
Southwestern Blvd/Howard Rd/Proposed Driveway (S)						
Eastbound Left – Southwestern Blvd	A(5.5)	A(5.0)	A(6.6)	A(6.5)	A(7.2)	A(8.1)
Eastbound Thru/Right – Southwestern Blvd	A(5.7)	A(3.8)	A(7.2)	A(4.5)	B(11.4)	B(10.0)
Westbound Left – Southwestern Blvd	A(0.0)	A(0.0)	A(0.0)	A(0.0)	A(7.2)	A(6.0)
Westbound Thru/Right – Southwestern Blvd	A(9.9)	B(10.4)	B(11.7)	B(12.6)	B(12.5)	B(14.9)
Northbound – Proposed Driveway	A(0.0)	A(0.0)	A(0.0)	A(0.0)	B(18.9)	C(20.8)
Southbound Left/Thru – Howard Road	D(51.6)	D(51.3)	D(54.3)	D(51.5)	D(51.8)	D(49.1)
Southbound Right – Howard Road	A(3.9)	A(4.3)	A(8.0)	A(5.8)	A(7.8)	A(4.9)
Overall LOS (Delay in sec/veh)	***B(11.4)***	***A(9.5)***	***B(14.4)***	***B(11.2)***	***B(16.6)***	***B(14.6)***
Howard Rd/Camp Rd/Queens Ln						
Eastbound Left – Queens Ln	F (*)	F(*)	F (*)	F(*)	F (*)	F(*)
Eastbound Thru/Right – Queens Ln	C(20.0)	C(24.2)	C(21.7)	C(26.3)	C(22.8)	C(27.8)
Westbound Left – Howard Rd	F(*)	F(*)	F(*)	F(*)	F(*)	F(*)
Westbound Thru/Right – Howard Rd	C(20.6)	C(22.2)	C(23.4)	C(22.3)	D(26.1)	C(23.0)
Northbound Left – Camp Rd	A(8.7)	B(13.1)	A(8.7)	B(13.2)	A(8.7)	B(13.2)
Southbound Left – Camp Rd	B(13.4)	B(10.0)	B(13.9)	B(10.4)	B(14.2)	B(10.5)

Notes:
B (10.8) = Level of Service (delay in seconds per vehicle)
(S) = Signalized; (U) = Un-signalized
NA = Approach does not exist and/or was not analyzed during this condition

Southwestern Boulevard/Howard Road/Proposed Driveway

All approaches operate at level of service "D" or better under existing, background, and full development conditions during both the AM and PM peak hours. The eastbound thru/right turn movements are projected to change from LOS "A" to "B" during both peak hours with increases in delay on the order of 4 to 5.5 seconds per vehicle. These increases in delay are relatively small and the resulting operating conditions, LOS "B", are above average and acceptable for a high volume roadway such as Southwestern Boulevard. The northbound approach is projected to operate at LOS "B" and "C" during the AM and PM peak hours, respectively under full development. This level of service and the corresponding delay are acceptable operating conditions for this intersection. The site driveway should be constructed with one entering and one exiting lane at its intersection with Southwestern Boulevard. No mitigation is warranted or recommended at this intersection.

Howard Road/Camp Road/Queens Lane

The eastbound and westbound left turn movements operate at LOS "F" under all conditions during both peak hours. The existing and projected delays, and corresponding level of service for the eastbound and westbound left turn movements are characteristic of un-signalized side roads on arterials such as Camp Road. There is a decrease in LOS

for the westbound thru/right approach during the AM peak hour between background and full development conditions from "C" to "D" which is the result of a borderline condition. The actual increase in delay is less than 3.0 seconds per vehicle and is well within acceptable thresholds. Between background and full development conditions, the southbound left approach is projected to increase in delay by less than 0.3 seconds during both peak hours as a result of the development. The proposed project is projected to add 22 (12) vehicles to the westbound right-turn movement during the AM and PM peak hours, respectively. As well, the southbound left-turn movement is projected to increase by 11 (20) vehicles during the AM and PM peak hours, respectively as a result of the proposed project.

The operating conditions at this intersection can be improved with the installation of a traffic signal. A traffic signal is warranted under the existing volume conditions. The NYSDOT should consider the intersection for installation of a traffic signal. However, given the small projected increases in delays directly resulting from the traffic added by the proposed project, no mitigation is warranted or recommended at this intersection as a resulted of the projected traffic from the proposed project during peak travel periods.

IX. LICENSE PLATE SURVEY

An origin and destination study (license plate survey) was conducted at the two study area intersections to document non-local traffic traveling between Camp Road and Southwestern Boulevard on Howard Road. The data collection occurred during the AM and PM peak study periods. The last four digits of each license plate were recorded during the peak hour/period at each location. Matches between the locations indicate vehicles that are making turning movements at either of the study area intersections and travelling to the other intersections. All of the license plate data is attached.

The following information is extracted based upon the data collected:

- 21 vehicles traveled eastbound from Camp Road to Southwestern Boulevard via Howard Road during the AM peak period.
- 20 vehicles traveled westbound from Southwestern Boulevard via Howard Road during the AM peak period.
- 59 vehicles traveled eastbound from Camp Road to Southwestern Boulevard via Howard Road during the PM peak period.
- 27 vehicles traveled westbound from Southwestern Boulevard via Howard Road during the AM peak period.

The above information can be summarized as follows: approximately 7% (22%) of eastbound exiting Howard Road traffic at Southwestern Boulevard is attributed to non-local traffic during the AM and PM peak periods, respectively. Conversely, approximately 7% (16%) of westbound exiting Howard Road traffic at Camp Road is attributed to non-local traffic during the AM and PM peak periods, respectively.

Based on the projected trip distribution pattern percentages, approximately 40% of exiting traffic attributable to the proposed project will use Howard Road and turn right onto Camp Road. Approximately 35% of entering traffic will utilize Howard Road travelling from Camp Road. The proposed project is projected to add 22 (12) vehicles to the westbound traffic on Howard Road during the AM and PM peak hours, respectively. As well, the proposed project is projected to add 11 (20) vehicles during the AM and PM peak hours, respectively, to eastbound traffic.

X. CONCLUSIONS & RECOMMENDATIONS

This TIS identifies and evaluates the potential traffic impacts that can be expected from the proposed Multifamily Project in the Town of Hamburg as described in this Study. Our firm's comprehensive analysis indicates that the existing transportation network can adequately accommodate the projected traffic volumes and resulting impacts to study area intersections. The following sets forth our firm's conclusions and recommendations based upon the results of the analyses:

1. The proposed residential project is expected to generate approximately 13 entering/54 exiting AM peak hour trips and 58 entering/31 exiting PM peak hour trips

2. The proposed project will not result in any potentially significant adverse traffic impacts to the study area intersections.

3. The proposed driveway at Southwestern Boulevard should consist of one exiting lane (combined left/right turn lane) and one entering lane.

4. It is our firm's professional opinion that the information contained in this TIS provides the Town of Hamburg with the necessary information to determine that the project will not result in any significant traffic impacts in connection with its issuance of a determination pursuant to the State Environmental Quality Review Act ("SEQRA").

XI. FIGURES

Figures 1 through 8 are included on the following pages.

FIGURE 1 - SITE LOCATION AND STUDY AREA

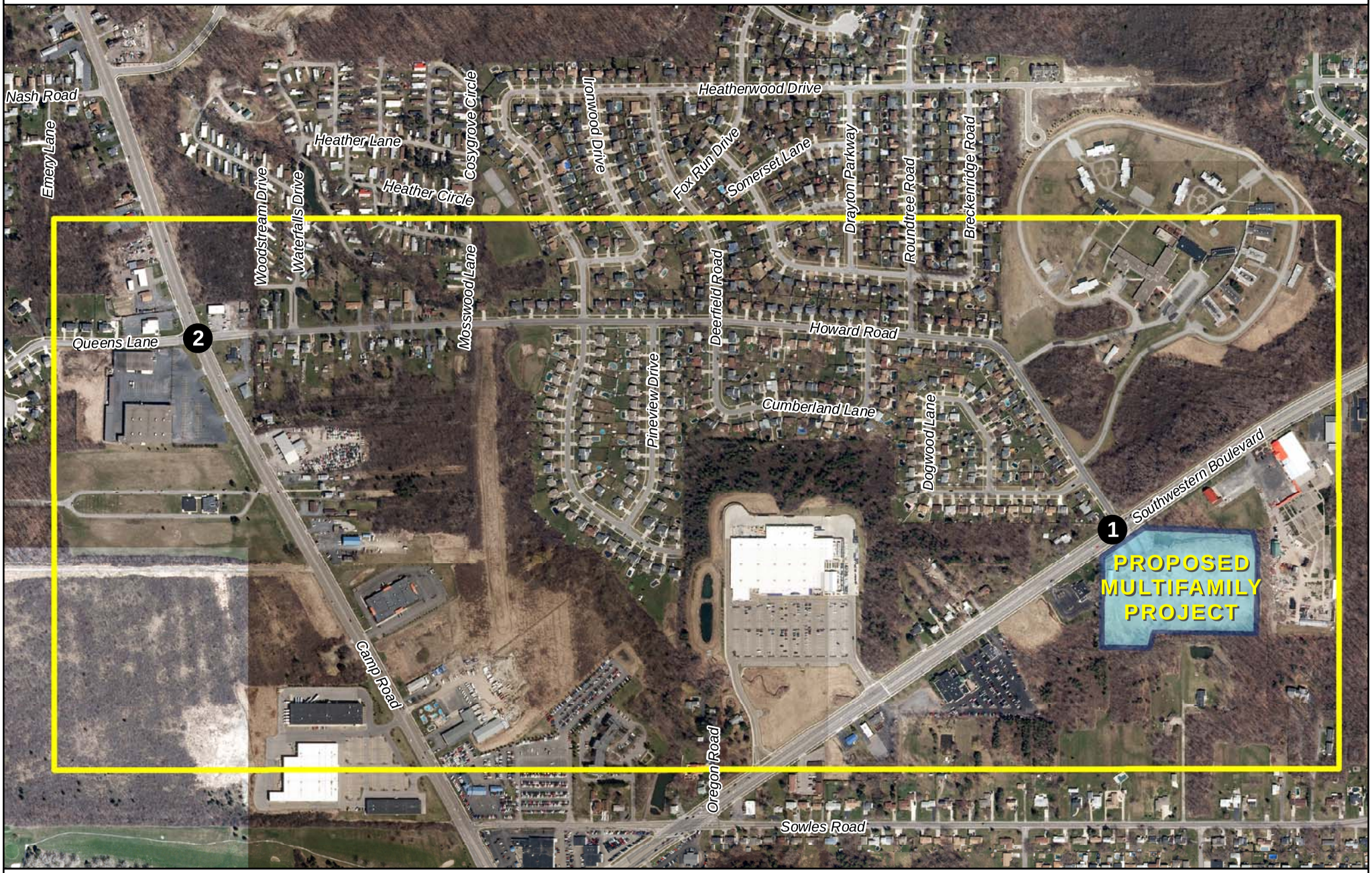

Legend

- Study Intersection
- Site Location
- Study Area

PROPOSED MULTIFAMILY PROJECT

TOWN OF HAMBURG, NY

Feet

0 400 800 1,600

N

SRF ASSOCIATES
WWW.SRFA.NET
Transportation Engineering & Planning Consultants

Note:
All counts by the Greater Buffalo–Niagara Regional Transportation Council
V.P.D = Vehicles Per Day

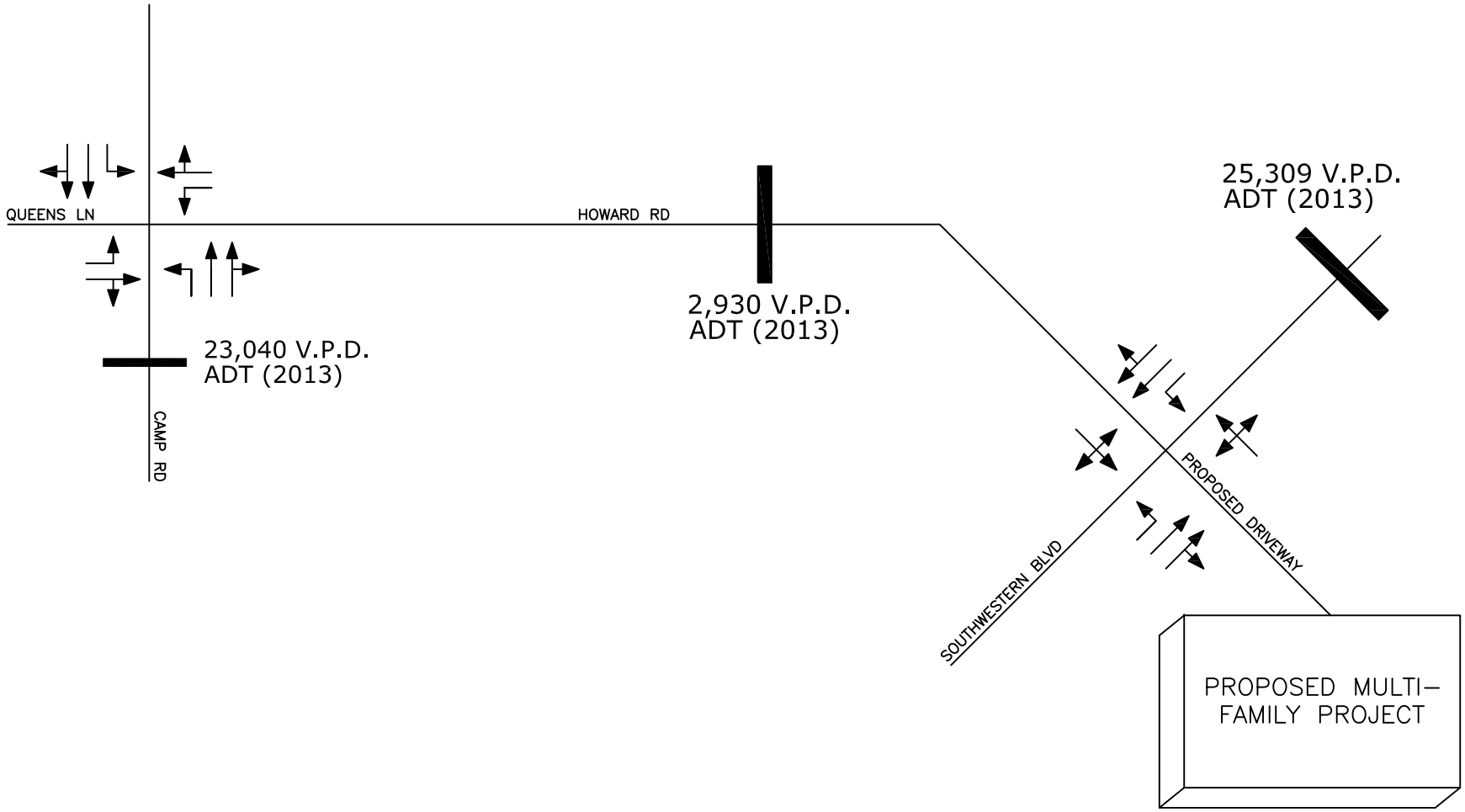

PROJECT NO: 35025

SRF ASSOCIATES
WWW.SRFA.NET
Transportation Engineering & Planning Consultants

N
NOT TO SCALE

FIGURE 2

LANE GEOMETRY &
AVERAGE DAILY TRAFFIC

PROPOSED MULTIFAMILY PROJECT
TOWN OF HAMBURG, NY

KEY

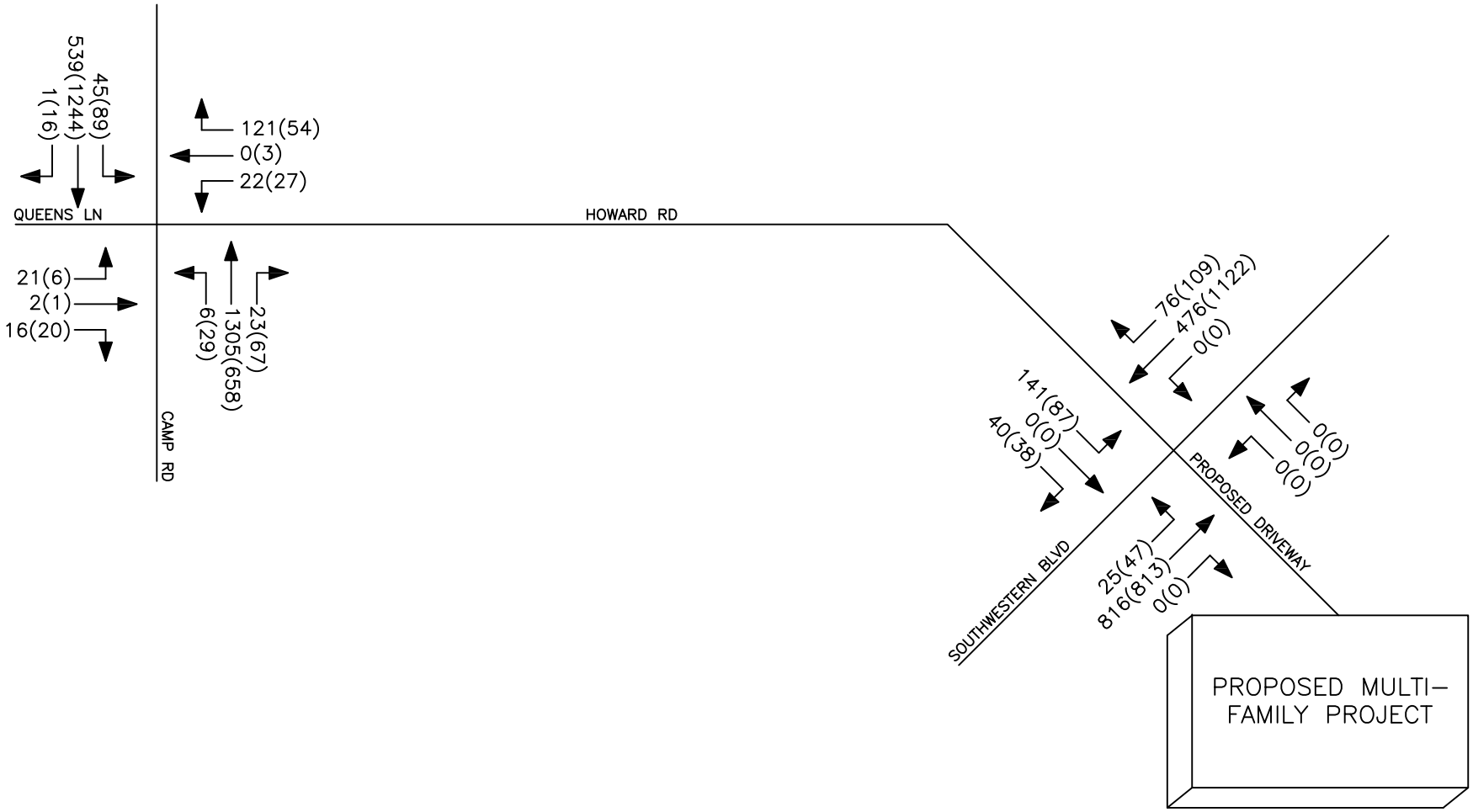

PROJECT NO: 35025

SRF ASSOCIATES
WWW.SRFA.NET
Transportation Engineering & Planning Consultants

N
NOT TO SCALE

FIGURE 3

PEAK HOUR VOLUMES
2015 EXISTING CONDITIONS

PROPOSED MULTIFAMILY PROJECT
TOWN OF HAMBURG, NY

KEY

00(00) = AM(PM)

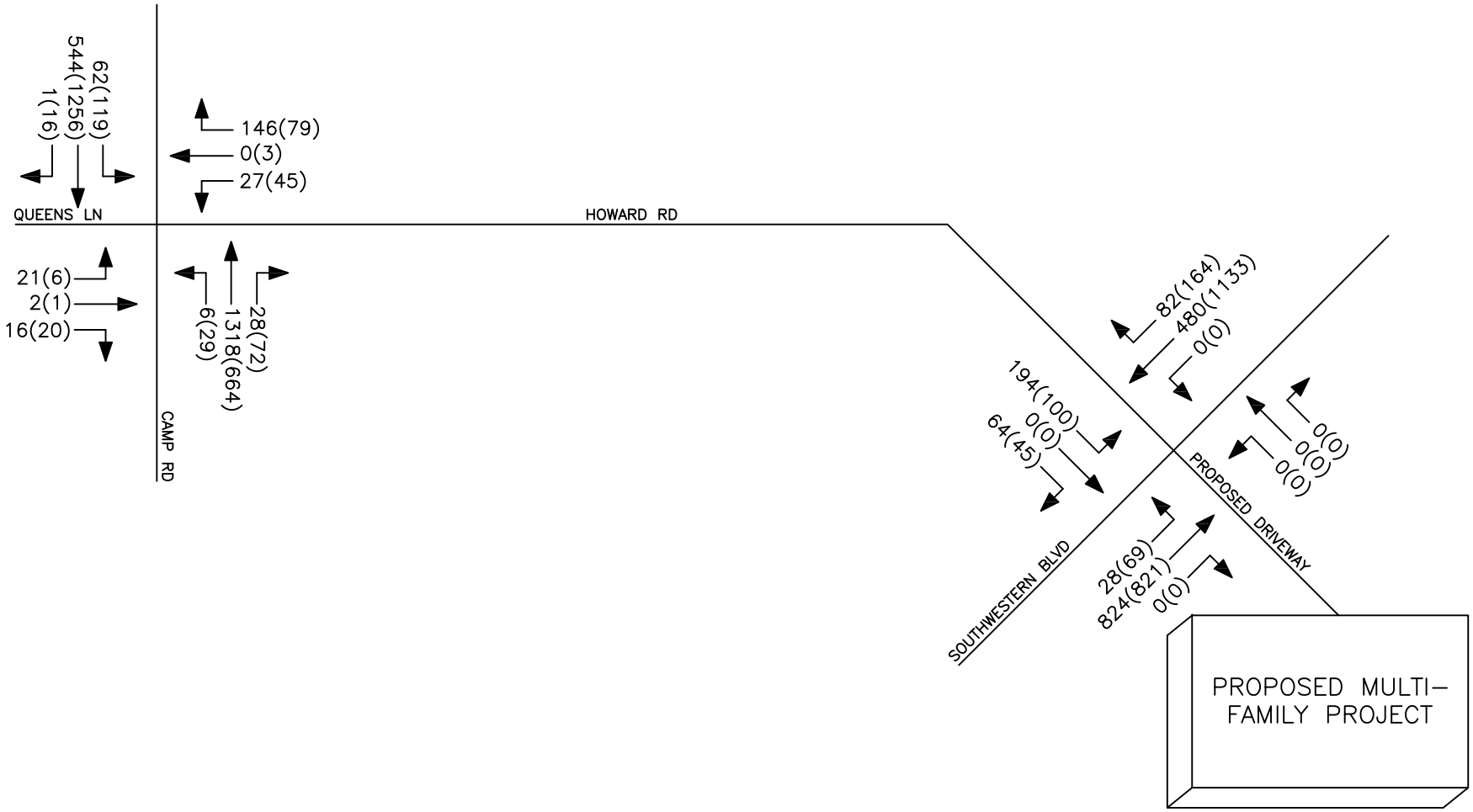

PROJECT NO: 35025

SRF ASSOCIATES
WWW.SRFA.NET
Transportation Engineering & Planning Consultants

N
NOT TO SCALE

FIGURE 4

PEAK HOUR VOLUMES
2017 BACKGROUND CONDITIONS

PROPOSED MULTIFAMILY PROJECT
TOWN OF HAMBURG, NY

KEY

00(00) = AM(PM)

© Carmina Wood Morris PC

All rights reserved. Reuse of these documents without the expressed written permission of Carmina Wood Morris PC is prohibited. WARNING: It is violation of article 145 sections 7209N and 7301 of the New York State education law for any person, unless acting under the direction of a registered architect, licensed engineer or land surveyor to alter this drawing. If altered such R.A., P.E. or L.L.S. shall affix his or her seal, signature, the date, the notation "altered by" and a specific description of the alteration.

FIGURE 5 - CONCEPT SITE PLAN

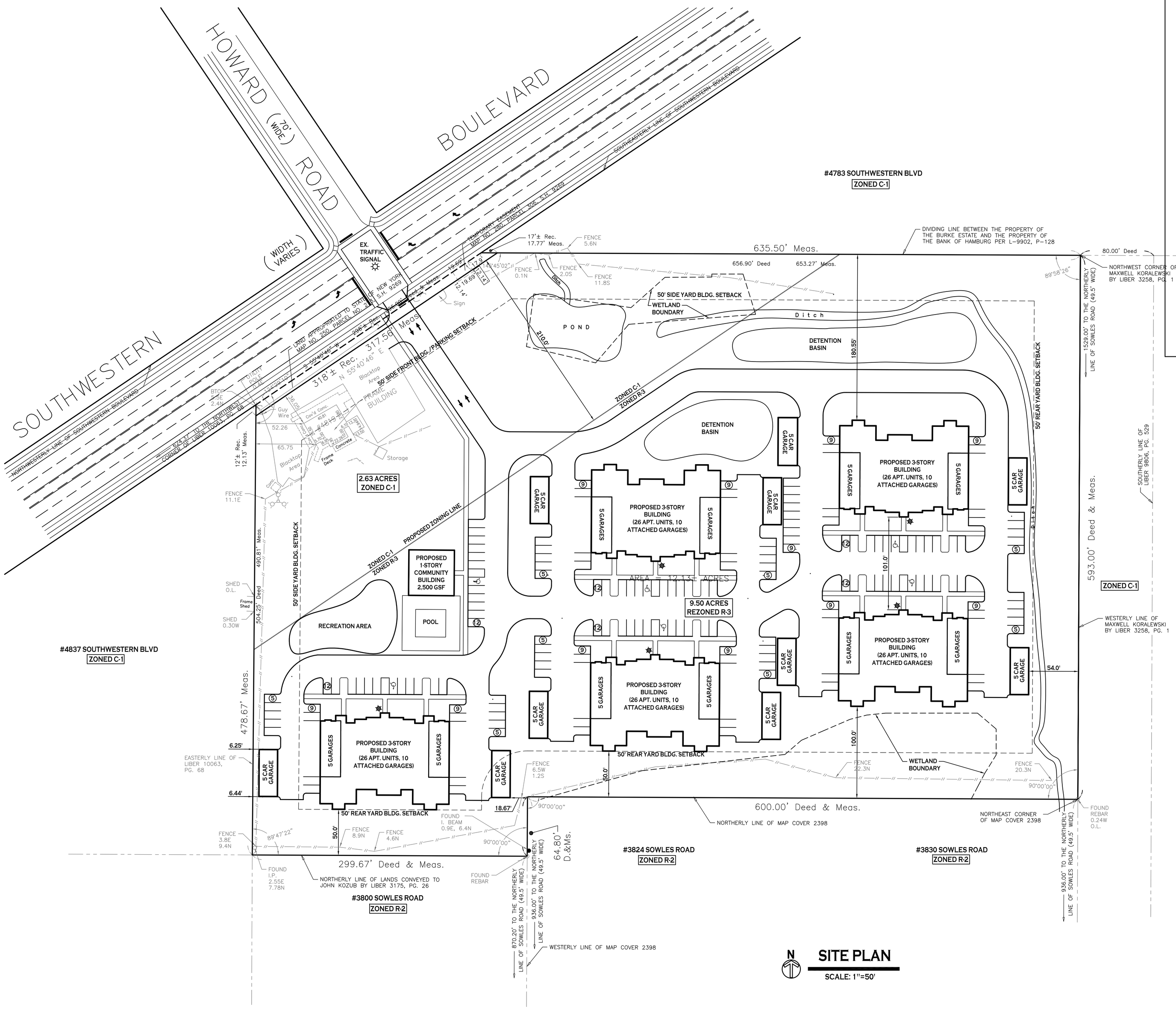

SITE PLAN

SCALE: 1"=50'

SITE DATA

SITE AREA = 9.50 AC REZONED TO R-3 (12.13 ACRES OVERALL PROPERTY)
ZONED: C-1, PORTION REZONED TO R-3 (MULTIFAMILY DISTRICT) - LOCATED IN THE SOUTHWESTERN BLVD OVERLAY DISTRICT
DESCRIPTION: (5) 3-STORY 26-UNIT BUILDINGS = 130UNITS (49.34' HIGH)

SETBACKS - BUILDING	REQUIRED	PROVIDED
FRONT (S' WESTERN OVERLAY REQUIREMENT):	50 FT	> 50 FT
SIDE (3 OR MORE FAMILY DWELLING):	50 FT	> 50 FT
REAR (3 OR MORE FAMILY DWELLING):	50 FT	50 FT MIN.
SETBACKS - PARKING		
FRONT:	50 FT	> 50 FT
SIDE	5 FT	> 5 FT
REAR	5 FT	> 5 FT
PRINCIPAL BLDG. SEPARATION		
BETWEEN VERTICAL WALLS OF BLDGS. (AVERAGE HEIGHT OF BLDG)	40.30 FT MIN.	101.0 FT MIN.
GREENSPACE		
TOTAL SITE (10%):	1.21 AC	> 10.0%
INTERIOR TO PARKING AREA (5%):	0.20 AC	> 5.0%
PARKING		211 OPEN
# OF SPACES - SEE CALCULATION BELOW	260	100 GARAGE
		311 TOTAL
LOT FRONTAGE		
LOT WIDTH AT FRONT LOT LINE:	200.0 FT MIN.	317.56 FT

PARKING CALCULATION:
"RESIDENTIAL APARTMENTS"
REQ'D = USE 2 SPACES PER UNIT
= 130 UNITS x 2 REQ. SPACES = 260 SPACES

Carmina Wood Morris PC
487 Main Street Suite 600
Buffalo, New York 14203
P 716.842.3165
F 716.842.0263

REVISIONS:

No.	Description	Date

PROJECT NAME:
New Construction
Multi-Family Development
4819 Southwestern Blvd.
Hamburg, New York

Issued for Construction: xx.xx.xx
Municipality Submission: 1/13/15
Drawn by: C. Wood
Scale: As Noted

DRAWING NAME:
Site Plan

DRAWING NO.
C-100

Project no.: 14.xxx

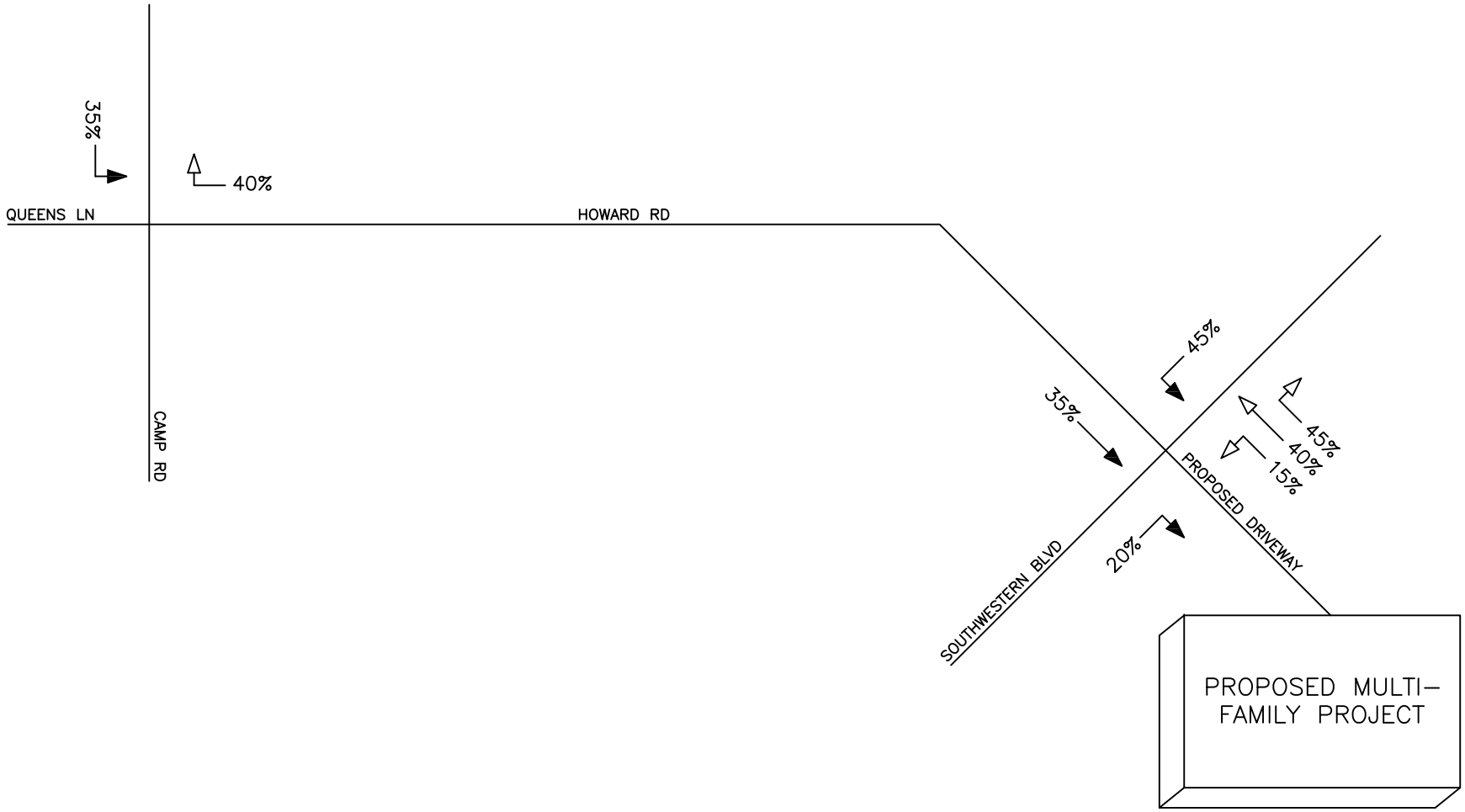

PROJECT NO: 35025

SRF ASSOCIATES
WWW.SRFA.NET
Transportation Engineering & Planning Consultants

N
NOT TO SCALE

FIGURE 6

TRIP DISTRIBUTION

PROPOSED MULTIFAMILY PROJECT
TOWN OF HAMBURG, NY

KEY

00(00) = AM(PM)

→ = ENTERING TRIPS
→ = EXITING TRIPS

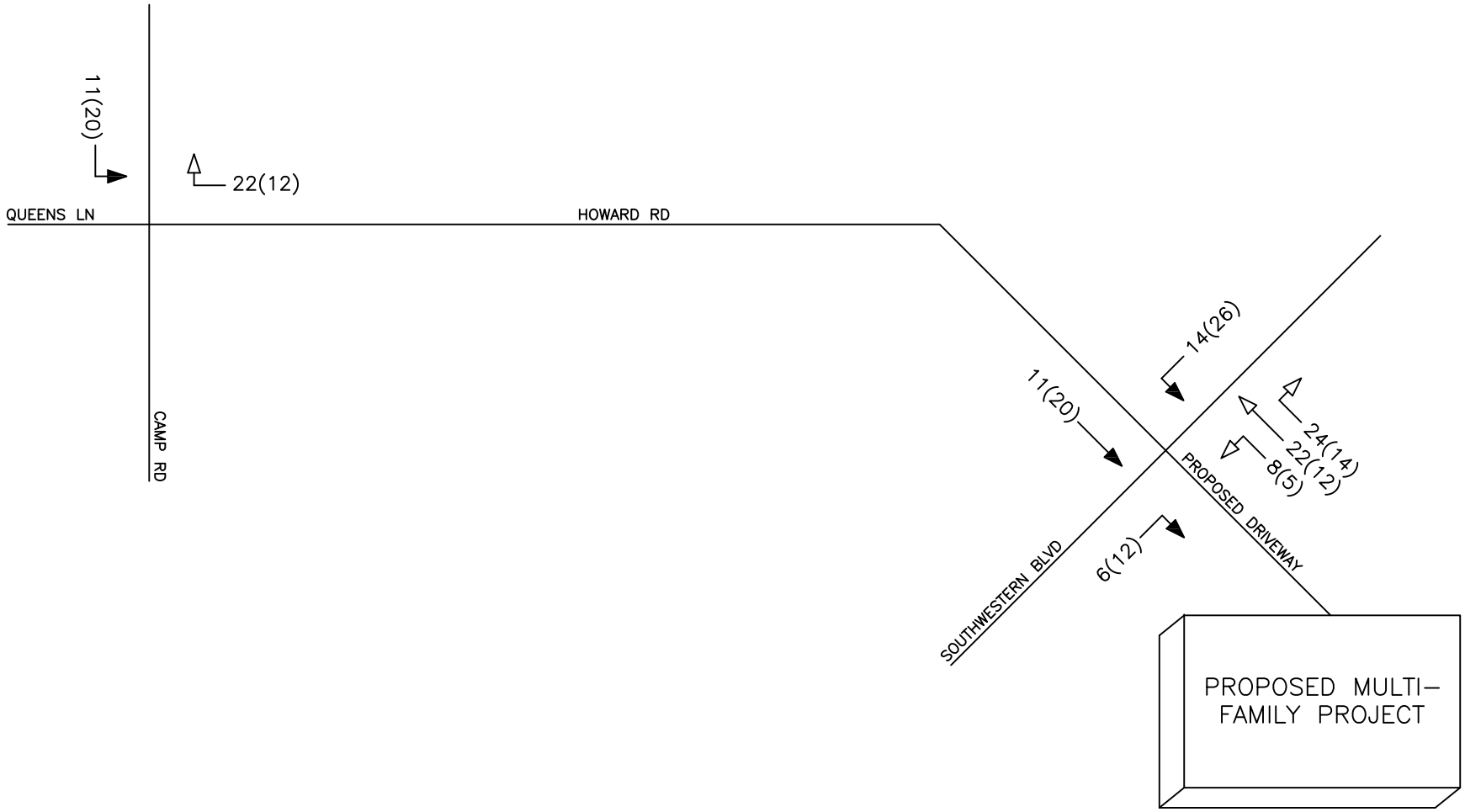

PROJECT NO: 35025

SRF ASSOCIATES
WWW.SRFA.NET
Transportation Engineering & Planning Consultants

N
NOT TO SCALE

FIGURE 7

SITE GENERATED TRIPS

PROPOSED MULTIFAMILY PROJECT
TOWN OF HAMBURG, NY

KEY

00(00) = AM(PM)

→ = ENTERING TRIPS
→ = EXITING TRIPS

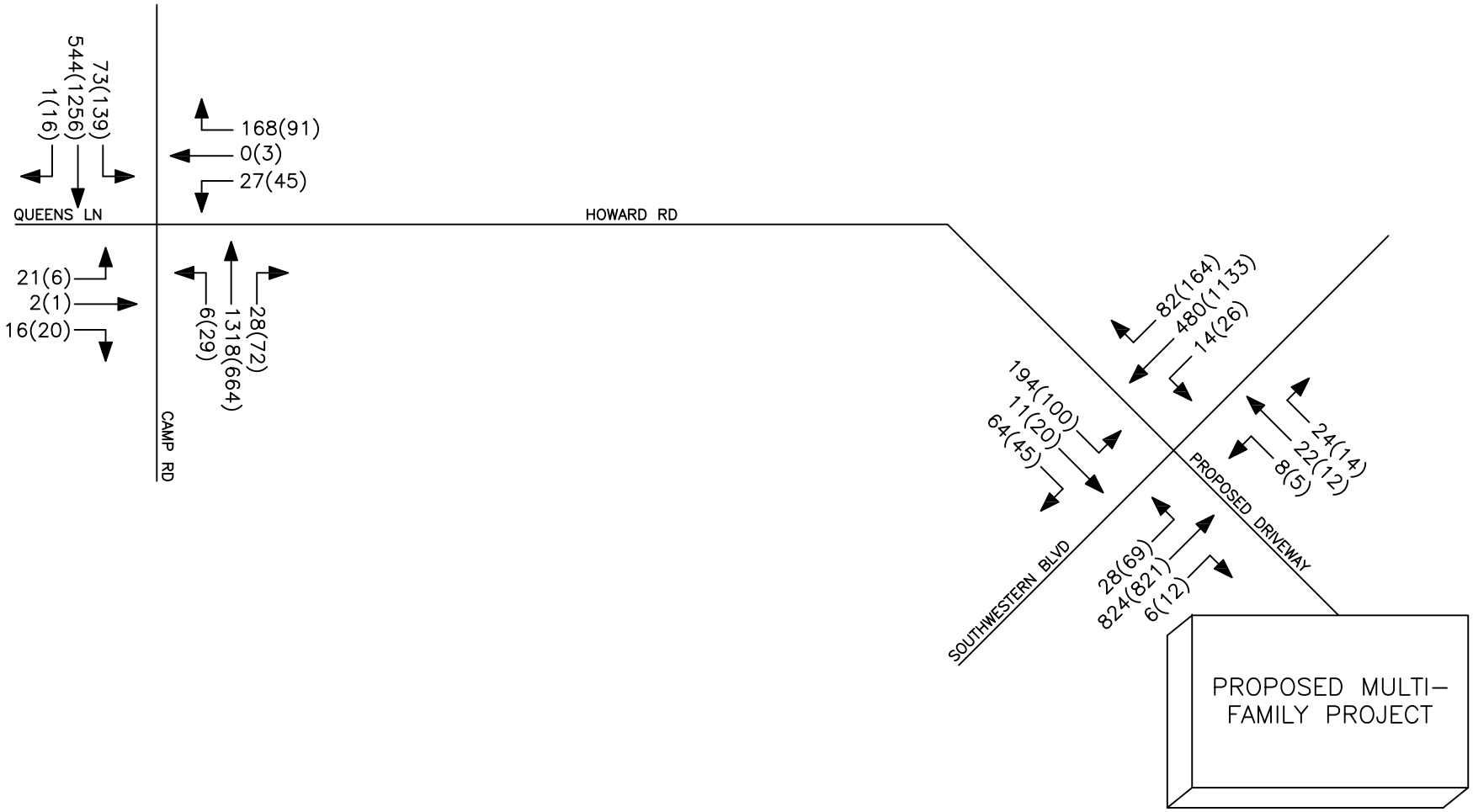

PROJECT NO: 35025

SRF ASSOCIATES
WWW.SRFA.NET
Transportation Engineering & Planning Consultants

N
NOT TO SCALE

FIGURE 8

PEAK HOUR VOLUMES
FULL DEVELOPMENT CONDITIONS

PROPOSED MULTIFAMILY PROJECT
TOWN OF HAMBURG, NY

KEY

00(00) = AM(PM)

APPENDICES

A1

Collected Traffic Volume Data

SRF & Associates
3495 Winton Place, Building E, Suite 110
Rochester, NY 14623

File Name : Southwestern.Howard.AM.Peak
Site Code : 00035025
Start Date : 4/16/2015
Page No : 1

Groups Printed- Unshifted - Bank 1 - Bank 2

	Howard Road Southbound				Southwestern Boulevard Westbound				Northbound				Southwestern Boulevard Eastbound				
Start Time	Right	Thru	Left	Peds	Right	Thru	Left	Peds	Right	Thru	Left	Peds	Right	Thru	Left	Peds	Int. Total
07:00 AM	12	0	26	0	9	113	0	0	0	0	0	0	0	186	3	0	349
07:15 AM	15	0	26	0	20	89	0	0	0	0	0	0	0	160	10	0	320
07:30 AM	19	0	34	0	20	135	0	0	0	0	0	0	0	229	6	0	443
07:45 AM	9	0	39	1	27	113	0	0	0	0	0	0	0	201	11	0	401
Total	55	0	125	1	76	450	0	0	0	0	0	0	0	776	30	0	1513
08:00 AM	5	0	42	0	19	112	0	0	0	0	0	0	0	214	3	0	395
08:15 AM	7	0	26	1	10	116	0	0	0	0	0	0	0	172	5	0	337
08:30 AM	10	0	26	0	9	128	0	0	0	0	0	0	0	211	6	0	390
08:45 AM	4	0	14	0	9	63	0	0	0	0	0	0	0	106	1	0	197
Total	26	0	108	1	47	419	0	0	0	0	0	0	0	703	15	0	1319
Grand Total	81	0	233	2	123	869	0	0	0	0	0	0	0	1479	45	0	2832
Apprch %	25.6	0	73.7	0.6	12.4	87.6	0	0	0	0	0	0	0	97	3	0	
Total %	2.9	0	8.2	0.1	4.3	30.7	0	0	0	0	0	0	0	52.2	1.6	0	
Unshifted	81	0	233	2	123	869	0	0	0	0	0	0	0	1479	45	0	2832
% Unshifted	100	0	100	100	100	100	0	0	0	0	0	0	0	100	100	0	100
Bank 1	0	0	0	0	0	0	0	0	0	0	0	0	0	0	0	0	0
% Bank 1	0	0	0	0	0	0	0	0	0	0	0	0	0	0	0	0	0
Bank 2	0	0	0	0	0	0	0	0	0	0	0	0	0	0	0	0	0
% Bank 2	0	0	0	0	0	0	0	0	0	0	0	0	0	0	0	0	0

SRF & Associates
3495 Winton Place, Building E, Suite 110
Rochester, NY 14623

File Name : Southwestern.Howard.AM.Peak
Site Code : 00035025
Start Date : 4/16/2015
Page No : 2

	Howard Road Southbound					Southwestern Boulevard Westbound					Northbound					Southwestern Boulevard Eastbound					
Start Time	Right	Thru	Left	Peds	App. Total	Right	Thru	Left	Peds	App. Total	Right	Thru	Left	Peds	App. Total	Right	Thru	Left	Peds	App. Total	Int. Total
Peak Hour Analysis From 07:00 AM to 08:45 AM - Peak 1 of 1																					
Peak Hour for Entire Intersection Begins at 07:30 AM																					
07:30 AM	**19**				**53**	20	**135**			**155**	0	0	0	0	0	0	**229**	6	0	**235**	**443**
07:45 AM	9	0	39	**1**		**27**	113	0	0	140	0	0	0	0	0	0	201	**11**			
08:00 AM	**5**	**0**	**42**	**0**	**47**	**19**	**112**	**0**	**0**	**131**	**0**	**0**	**0**	**0**	**0**	**0**	**214**	**3**	**0**	**217**	**395**
08:15 AM	**7**	**0**	**26**	**1**	**34**	**10**	**116**	**0**	**0**	**126**	**0**	**0**	**0**	**0**	**0**	**0**	**172**	**5**	**0**	**177**	**337**
Total Volume	40	0	141	2	183	76	476	0	0	552	0	0	0	0	0	0	816	25	0	841	1576
% App. Total	21.9	0	77	1.1		13.8	86.2	0	0		0	0	0	0		0	97	3	0		
PHF	.526	.000	.839	.500	.863	.704	.881	.000	.000	.890	.000	.000	.000	.000	.000	.000	.891	.568	.000	.895	.889

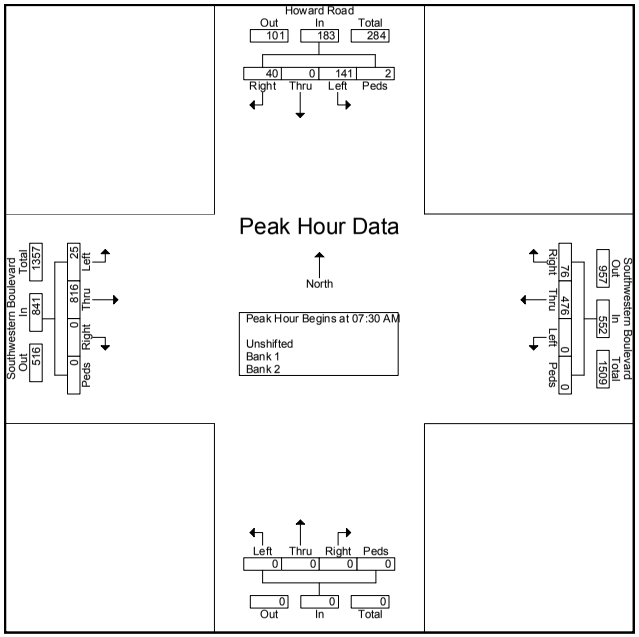

SRF & Associates
3495 Winton Place, Building E, Suite 110
Rochester, NY 14623

File Name : Southwestern.Howard.PM.Peak
Site Code : 00350252
Start Date : 4/16/2015
Page No : 1

Groups Printed- Unshifted - Bank 1 - Bank 2

	Howard Road Southbound				Southwestern Boulevard Westbound				Northbound				Southwestern Boulevard Eastbound				
Start Time	Right	Thru	Left	Peds	Right	Thru	Left	Peds	Right	Thru	Left	Peds	Right	Thru	Left	Peds	Int. Total
04:00 PM	8	1	22	0	26	267	0	0	0	0	0	0	0	207	10	0	541
04:15 PM	10	0	18	0	38	240	0	0	0	0	0	0	0	192	9	0	507
04:30 PM	6	0	21	0	25	255	0	0	0	0	0	0	0	227	10	0	544
04:45 PM	10	0	27	0	29	302	0	0	0	0	0	0	0	204	7	0	579
Total	34	1	88	0	118	1064	0	0	0	0	0	0	0	830	36	0	2171
05:00 PM	11	0	19	0	28	278	0	0	0	0	0	0	0	218	15	0	569
05:15 PM	11	0	20	0	27	287	0	0	0	0	0	0	0	164	15	0	524
05:30 PM	11	0	41	0	31	249	0	0	0	0	0	0	0	162	7	0	501
05:45 PM	7	0	20	0	23	211	0	0	0	0	0	0	0	198	11	0	470
Total	40	0	100	0	109	1025	0	0	0	0	0	0	0	742	48	0	2064
Grand Total	74	1	188	0	227	2089	0	0	0	0	0	0	0	1572	84	0	4235
Apprch %	28.1	0.4	71.5	0	9.8	90.2	0	0	0	0	0	0	0	94.9	5.1	0	
Total %	1.7	0	4.4	0	5.4	49.3	0	0	0	0	0	0	0	37.1	2	0	
Unshifted	74	1	188	0	227	2089	0	0	0	0	0	0	0	1572	84	0	4235
% Unshifted	100	100	100	0	100	100	0	0	0	0	0	0	0	100	100	0	100
Bank 1	0	0	0	0	0	0	0	0	0	0	0	0	0	0	0	0	0
% Bank 1	0	0	0	0	0	0	0	0	0	0	0	0	0	0	0	0	0
Bank 2	0	0	0	0	0	0	0	0	0	0	0	0	0	0	0	0	0
% Bank 2	0	0	0	0	0	0	0	0	0	0	0	0	0	0	0	0	0

SRF & Associates
3495 Winton Place, Building E, Suite 110
Rochester, NY 14623

File Name : Southwestern.Howard.PM.Peak
Site Code : 00350252
Start Date : 4/16/2015
Page No : 2

	Howard Road Southbound					Southwestern Boulevard Westbound					Northbound					Southwestern Boulevard Eastbound					
Start Time	Right	Thru	Left	Peds	App. Total	Right	Thru	Left	Peds	App. Total	Right	Thru	Left	Peds	App. Total	Right	Thru	Left	Peds	App. Total	Int. Total
Peak Hour Analysis From 04:00 PM to 05:45 PM - Peak 1 of 1																					
Peak Hour for Entire Intersection Begins at 04:30 PM																					
04:30 PM	6	0	21	0	27	25	255	0	0	280	0	0	0	0	0	0	**227**	10	0	**237**	544
04:45 PM	10	0	**27**		**37**	**29**	**302**			**331**	0	0	0	0	0	0	204	7	0	211	**579**
05:00 PM	**11**																	**15**			
05:15 PM	**11**	**0**	**20**	**0**	**31**	**27**	**287**	**0**	**0**	**314**	**0**	**0**	**0**	**0**	**0**	**0**	**164**	**15**	**0**	**179**	**524**
Total Volume	38	0	87	0	125	109	1122	0	0	1231	0	0	0	0	0	0	813	47	0	860	2216
% App. Total																					
PHF	.864	.000	.806	.000	.845	.940	.929	.000	.000	.930	.000	.000	.000	.000	.000	.000	.895	.783	.000	.907	.957

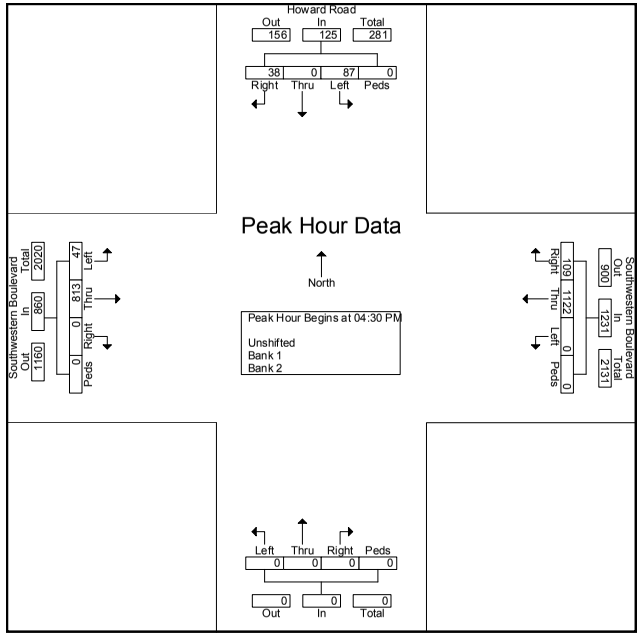

SRF & Associates
3495 Winton Place, Building E, Suite 110
Rochester, NY 14623

File Name : Camp.Howard.AM.Peak
Site Code : 11111111
Start Date : 4/14/2015
Page No : 1

Groups Printed- Unshifted - Bank 1 - Bank 2

	Camp Road Southbound				Howard Road Westbound				Camp Road Northbound				Queens Lane Eastbound				
Start Time	Right	Thru	Left	Peds	Right	Thru	Left	Peds	Right	Thru	Left	Peds	Right	Thru	Left	Peds	Int. Total
07:00 AM	0	120	7	0	34	0	3	0	5	299	1	0	6	0	2	0	477
07:15 AM	0	131	8	0	31	0	6	0	7	349	0	0	1	0	4	0	537
07:30 AM	0	148	10	0	35	0	4	0	7	330	1	1	5	0	3	0	544
07:45 AM	1	118	16	0	19	0	4	0	2	324	1	0	8	2	7	1	503
Total	1	517	41	0	119	0	17	0	21	1302	3	1	20	2	16	1	2061
08:00 AM	0	142	11	0	36	0	8	0	7	302	4	0	2	0	7	0	519
08:15 AM	3	129	12	1	23	0	7	0	9	226	2	0	3	1	0	0	416
08:30 AM	1	127	12	0	22	0	6	0	5	227	2	0	4	1	1	0	408
08:45 AM	2	127	5	0	21	1	7	0	11	187	0	0	3	2	1	0	367
Total	6	525	40	1	102	1	28	0	32	942	8	0	12	4	9	0	1710
Grand Total	7	1042	81	1	221	1	45	0	53	2244	11	1	32	6	25	1	3771
Apprch %	0.6	92.1	7.2	0.1	82.8	0.4	16.9	0	2.3	97.2	0.5	0	50	9.4	39.1	1.6	
Total %	0.2	27.6	2.1	0	5.9	0	1.2	0	1.4	59.5	0.3	0	0.8	0.2	0.7	0	
Unshifted	7	1042	81	1	221	1	45	0	53	2244	11	1	32	6	25	1	3771
% Unshifted	100	100	100	100	100	100	100	0	100	100	100	100	100	100	100	100	100
Bank 1	0	0	0	0	0	0	0	0	0	0	0	0	0	0	0	0	0
% Bank 1	0	0	0	0	0	0	0	0	0	0	0	0	0	0	0	0	0
Bank 2	0	0	0	0	0	0	0	0	0	0	0	0	0	0	0	0	0
% Bank 2	0	0	0	0	0	0	0	0	0	0	0	0	0	0	0	0	0

SRF & Associates
3495 Winton Place, Building E, Suite 110
Rochester, NY 14623

File Name : Camp.Howard.AM.Peak
Site Code : 11111111
Start Date : 4/14/2015
Page No : 2

	Camp Road Southbound					Howard Road Westbound					Camp Road Northbound					Queens Lane Eastbound					
Start Time	Right	Thru	Left	Peds	App. Total	Right	Thru	Left	Peds	App. Total	Right	Thru	Left	Peds	App. Total	Right	Thru	Left	Peds	App. Total	Int. Total
Peak Hour Analysis From 07:00 AM to 08:45 AM - Peak 1 of 1																					
Peak Hour for Entire Intersection Begins at 07:15 AM																					
07:15 AM	0	131	8	0	139	31	0	6	0	37	**7**	**349**			**356**	1	0	4	0	5	537
07:30 AM	0	**148**	10	0	**158**	35	0	4	0	39	7	330	1	**1**							**544**
07:45 AM	**1**		**16**													**8**	**2**	**7**	**1**	**18**	503
08:00 AM	0	142	11	0	153	**36**	0	**8**		**44**	7	302	**4**	0	313	2	0	7	0	9	519
Total Volume	1	539	45	0	585	121	0	22	0	143	23	1305	6	1	1335	16	2	21	1	40	2103
% App. Total																					
PHF	.250	.910	.703	.000	.926	.840	.000	.688	.000	.813	.821	.935	.375	.250	.938	.500	.250	.750	.250	.556	.966

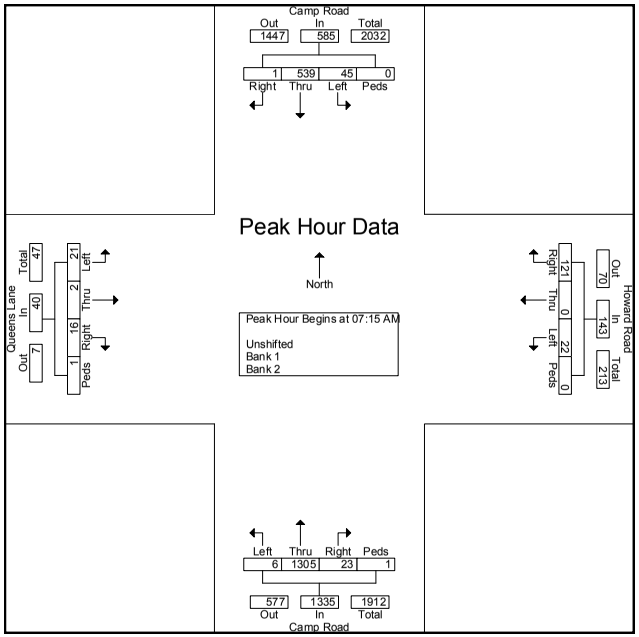

SRF & Associates
3495 Winton Place, Building E, Suite 110
Rochester, NY 14623

File Name : Camp.Howard.PM.Peak
Site Code : 22222222
Start Date : 4/14/2015
Page No : 1

Groups Printed- Unshifted - Bank 1 - Bank 2

	Camp Road Southbound				Howard Road Westbound				Camp Road Northbound				Queens Lane Eastbound				
Start Time	Right	Thru	Left	Peds	Right	Thru	Left	Peds	Right	Thru	Left	Peds	Right	Thru	Left	Peds	Int. Total
04:00 PM	6	287	16	0	12	1	7	0	12	163	8	0	6	1	1	0	520
04:15 PM	1	304	26	0	17	0	6	0	19	142	5	1	11	0	0	0	532
04:30 PM	4	352	24	1	14	0	9	0	17	171	7	1	3	0	1	0	604
04:45 PM	3	318	20	2	14	1	5	0	12	140	8	1	9	0	2	0	535
Total	14	1261	86	3	57	2	27	0	60	616	28	3	29	1	4	0	2191
05:00 PM	6	297	24	0	12	1	6	0	22	181	6	0	3	0	2	0	560
05:15 PM	3	277	21	0	14	1	7	0	16	166	8	0	5	1	1	0	520
05:30 PM	3	247	29	0	16	0	6	0	13	135	4	0	3	0	0	0	456
05:45 PM	5	312	30	0	10	0	9	0	8	109	8	0	4	0	4	0	499
Total	17	1133	104	0	52	2	28	0	59	591	26	0	15	1	7	0	2035
Grand Total	31	2394	190	3	109	4	55	0	119	1207	54	3	44	2	11	0	4226
Apprch %	1.2	91.4	7.3	0.1	64.9	2.4	32.7	0	8.6	87.3	3.9	0.2	77.2	3.5	19.3	0	
Total %	0.7	56.6	4.5	0.1	2.6	0.1	1.3	0	2.8	28.6	1.3	0.1	1	0	0.3	0	
Unshifted	31	2394	190	3	109	4	55	0	119	1207	54	3	44	2	11	0	4226
% Unshifted	100	100	100	100	100	100	100	0	100	100	100	100	100	100	100	0	100
Bank 1	0	0	0	0	0	0	0	0	0	0	0	0	0	0	0	0	0
% Bank 1	0	0	0	0	0	0	0	0	0	0	0	0	0	0	0	0	0
Bank 2	0	0	0	0	0	0	0	0	0	0	0	0	0	0	0	0	0
% Bank 2	0	0	0	0	0	0	0	0	0	0	0	0	0	0	0	0	0

SRF & Associates
3495 Winton Place, Building E, Suite 110
Rochester, NY 14623

File Name : Camp.Howard.PM.Peak
Site Code : 22222222
Start Date : 4/14/2015
Page No : 2

	Camp Road Southbound					Howard Road Westbound					Camp Road Northbound					Queens Lane Eastbound					
Start Time	Right	Thru	Left	Peds	App. Total	Right	Thru	Left	Peds	App. Total	Right	Thru	Left	Peds	App. Total	Right	Thru	Left	Peds	App. Total	Int. Total
Peak Hour Analysis From 04:30 PM to 05:15 PM - Peak 1 of 1																					
Peak Hour for Entire Intersection Begins at 04:30 PM																					
04:30 PM	4	**352**	**24**		**381**	**14**	0	**9**		**23**	17	171	7	**1**							**604**
04:45 PM	3	318	20	**2**			**1**						**8**	1	161	**9**		**2**		**11**	535
05:00 PM	**6**										**22**	**181**			**209**	3	0	2	0	5	560
05:15 PM	3	277	21	0	301	14	1	7	0	22	16	166	8	0	190	5	**1**	1	0	7	520
Total Volume	16	1244	89	3	1352	54	3	27	0	84	67	658	29	2	756	20	1	6	0	27	2219
% App. Total	1.2	92	6.6	0.2		64.3	3.6	32.1	0		8.9	87	3.8	0.3		74.1	3.7	22.2	0		
PHF	.667	.884	.927	.375	.887	.964	.750	.750	.000	.913	.761	.909	.906	.500	.904	.556	.250	.750	.000	.614	.918

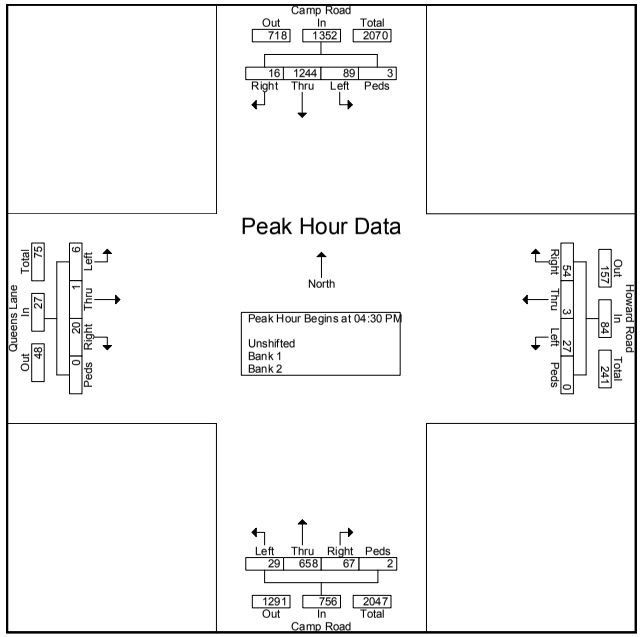

A2

Miscellaneous Traffic Data and Calculations

SRF ASSOCIATES
WWW.SRFA.NET
Traffic Engineering & Planning Consultants

Proposed Multifamily Project, Town of Hamburg, Erie County

Documentation of Ambient Traffic Volume Growth

Roadway	Segment starts at	Segment end at	2003	2007	2010	2013	Annual Growth
Southwestern Blvd	Camp Road	South Park Ave	23,600	21,300	24,225	25,300	0.70%

Project Information	
Project Name:	Hanania Residential Development
No:	
Date:	3/26/2015
City:	
State/Province:	NY
Zip/Postal Code:	
Country:	
Client Name:	
Analyst's Name:	ACD
Edition:	ITE-TGM 9th Edition

Land Use	Size	Weekday		Weekday, Peak Hour of Adjacent Street Traffic, One Hour Between 7 and 9 a.m.		Weekday, Peak Hour of Adjacent Street Traffic, One Hour Between 4 and 6 p.m.	
		Entry	Exit	Entry	Exit	Entry	Exit
220 - Apartment	130 Dwelling Units	456	455	13	54	58	31
Reduction		0	0	0	0	0	0
Internal		0	0	0	0	0	0
Pass-by		0	0	0	0	0	0
Non-pass-by		456	455	13	54	58	31
Total		456	455	13	54	58	31
Total Reduction		0	0	0	0	0	0
Total Internal		0	0	0	0	0	0
Total Pass-by		0	0	0	0	0	0
Total Non-pass-by		456	455	13	54	58	31

PROPOSED MULTIFAMILY PROJECT
TOWN OF HAMBURG, NY
AM PEAK

Num of yrs
2

LOCATION NUMBER	INTERSECTION DESCRIPTION	Existing Volume	Sherwood Meadows	Bkgd Volume 0.50%	Proposed Multifamily Project Enter Dist. %	Exit Dist. %	Trips IN 31	Trips OUT 54	Total Site Trips	Full Build Volumes
1	SOUTHWESTERN BLVD/ HOWARD ROAD									
	SR	40	24	64					0	64
	ST				35%		11		11	11
	SL	141	52	194					0	194
	WR	76	6	82					0	82
	WT	476		480					0	480
	WL				45%		14		14	14
	NR					45%		24	24	24
	NT					40%		22	22	22
	NL					15%		8	8	8
	ER				20%		6		6	6
	ET	816		824					0	824
	EL	25	3	28					0	28
2	CAMP ROAD/QUEENS LANE/ HOWARD ROAD									
	SR	1		1					0	1
	ST	539		544					0	544
	SL	45	17	62	35%		11		11	73
	WR	121	24	146		40%		22	22	168
	WT								0	
	WL	22	5	27					0	27
	NR	23	5	28					0	28
	NT	1305		1318					0	1318
	NL	6		6					0	6
	ER	16		16					0	16
	ET	2		2					0	2
	EL	21		21					0	21

PROPOSED MULTIFAMILY PROJECT
TOWN OF HAMBURG, NY
PM PEAK

Num of yrs
2

LOCATION NUMBER	INTERSECTION DESCRIPTION	Existing Volume	Sherwood Meadows	Bkgd Volume 0.50%	Proposed Multifamily Project Enter Dist. %	Exit Dist. %	Trips IN 58	Trips OUT 31	Total Site Trips	Full Build Volumes
1	SOUTHWESTERN BLVD/ HOWARD ROAD									
	SR	38	7	45					0	45
	ST				35%		20		20	20
	SL	87	13	100					0	100
	WR	109	54	164					0	164
	WT	1122		1133					0	1133
	WL				45%		26		26	26
	NR					45%		14	14	14
	NT					40%		12	12	12
	NL					15%		5	5	5
	ER				20%		12		12	12
	ET	813		821					0	821
	EL	47	22	69					0	69
2	CAMP ROAD/QUEENS LANE/ HOWARD ROAD									
	SR	16		16					0	16
	ST	1244		1256					0	1256
	SL	89	30	119	35%		20		20	139
	WR	54	25	79		40%		12	12	91
	WT	3		3					0	3
	WL	27	18	45					0	45
	NR	67	5	72					0	72
	NT	658		664					0	664
	NL	29		29					0	29
	ER	20		20					0	20
	ET	1		1					0	1
	EL	6		6					0	6

INTERSECTION ACCIDENT RATE CALCULATIONS

$$\text{Rate per MEV} = \frac{\text{\# of Accidents} \times 1{,}000{,}000}{\text{Total No. of Entering Vehicles}} =$$

$$\text{Rate} = \frac{\text{\# of Accidents} \times 1{,}000{,}000}{\text{Veh./Day} \times \text{Duration of Study}} =$$

Accidents per million entering vehicles (Acc / MEV)

---

1 Southwestern Boulevard/Howard Road

ADT = Peak hour entering volume / k factor

ADT = 2216 VPH / 0.09 = 24622 VPD

$$\text{Rate} = \frac{12 \text{ Acc.} \times 1{,}000{,}000}{24622 \text{ VPD} \times 365 \text{ Days} \times 3.000 \text{ Yrs.}} = 0.45 \text{ Acc / MEV}$$

2 Howard Road/Camp Road

ADT = Peak hour entering volume / k factor

ADT = 2214 VPH / 0.09 = 24600 VPD

$$\text{Rate} = \frac{5 \text{ Acc.} \times 1{,}000{,}000}{24600 \text{ VPD} \times 365 \text{ Days} \times 3.000 \text{ Yrs.}} = 0.19 \text{ Acc / MEV}$$

LICENSE PLATE SURVEY - AM PEAK PERIOD

Camp Road to Southwestern Blvd
Southwestern Blvd to Camp Road

Camp Road/Howard Road

Time	NB Right	SB Left	EB Thru	WB Right	WB Left	WB Thru
7:00	8349	8972		JA	8585	
	586	Bus 74		Bus 127	5771	
	7777			9368	4705	
				8644		
				9789		
				2704		
				4869		
				6348		
				2679		
				149MLV		
				5072		
				5258		
				3520		
				4451		
				1960		
				3351		
				8NR		
				5712		
				9384		
				7200		
				6352		
				30JS		
				4852		
				BCY		
				478		
				506MG		
				9715		
				5680		
				61ME		
				8293		
				849MB		
				580JW		
7:15	8655	8008		9027	2078	
	1748	1594		2544	6912	
	2078	3007		5985	1402	
	MA	4357		9756	8596	
	7997	9994		2014		
	6047	-46		8892		
	7650	7196		9368		
				3045		
				1593		
				8898		
				8373		
				7466		
				2807		
				8847		
				7828		
				4334		
				3022		
				5064		
				3825		
				3081		
				9998		
				3463		
				1014		
				4052		
				3664		
				5743		
				9336		
				4981		
				1748		
				5221		
				7575		
				7107		
				6334		
				89ME		
7:30	8293	2775		7298	6597	
	6791	6526		1503	bus176	
	4705	1075		7480	WCC	
	1041	1289		1522	4742	
	BUs157	1573		9789	616MA	
	1800	bus63		7196		
	5021	6262		7034		
	6597	7984		3619		
		9093		6917		
		2431		5527		
				5881		
				6962		
				6966		

Southwestern Boulevard/Howard Road

SB Left	SB Right	EB left	WB Right
2408	5403	5455	5386
8213	4982	9152	8847
E154	6910	2512	8118
8579	386	6601	6352
1484	8972	5087	7862
9308	6850	24NC	1882
8674	1343	6438	6165
1936	47KA	5UTC	8660
7131	6854	8985	4649
9231	4597	5359	5399
8247	5648	2781	1718
2681	1438	9533	3626
95JN	9841	2782	8521
1594	6555	7892	7226
3841	5991	5957	4982
4622	6160	5703	4699
4537	7392	49MC	8479
5226	2078	5238	9718
1944	7450	3283	67JH
7661	6821	2865	1953
1580	1399	8118	7492
6313	3984	47JM	L2LA
9600	39JJ	9606	17L8A
2515	2544	5497	1788
4367	5238	1059	38JS
L1MH	2901	1189	2752
1882	8118	1962	4133
5258	4903	3274	7650
5423	8547	4726	69J4
1855	2864	2279	1409
1934	9552	7635	1925
1718	SAE	9921	2830
6689	7923	8011	9174
6092	2616	7802	3986
6065	9139		4607
7923	5150		63SH
4184	2809		71ME
5122	1189		9280
7232	8579		91BA
2707	7517		98J8
5385	6171		8808
5735	9564		2735
3998	36JB		2302
2139	6381		69BB
8598	2936		68BB
7985	53JB		6255
1365	8173		8475
2680	5846		9608
1466	6286		9365
4598	J541		9301
3905	5933		06BA
7541	1573		2616
2880	6682		9169
4962	9608		4882
1800	3586		8476
74MO	1657		RGUY
8410			7982
817B			4459
4924			9471
7689			87JX
1509			4137
6255			8044
1953			1435
8971			4144
6754			4367
2919			7437
5213			9265
7655			3315
7965			2114
6237			4622
4583			7589
6546			7232
3986			8965
3981			
1496			
1381			
7589			
17LA			
7635			

				2114			7888
				4126		72LV	
				5048			1960
				8908		69BB	
				8214			7427
				1061			3541
				4705			4387
				5159		68BB	
				9169			7024
				9713			1003
				police30			3331
				6165			4071
				1039			9877
				7904			5975
				7862			1234
				5040			2724
				6925			2230
				2709			7072
				5908			2268
				4849			8914
7:45	4733	7374		3363	7292JY		2293
		7359		3035	3646		8948
		3998		7688	6701	66BA	
		1365		5029		98JS	
		-2		9705			8874
		1185		8475			7500
	bus23			3872		238M	
	JV			1657			2303
		4563		7866			2833
		9964		7063			9791
		3815		2955			4943
		7635		1494			1925
	bus384			7654			5164
		3484		4731			8899
		2919		67JH			7789
				6010			2739
				5267			9651
				7635			7005
				2988			7728
				9365			7592
				9635			1685
				38JS			9265
				8051			4677
				7650			2639
8:00	3646	9365		4452	1916		4669
	4989	7862		4666	1545		6102
	2503	1702		36ME	Q3 Wheelchair		5778
	4747	1957		4607	4056		6047
	3586	8547		1875	9292		8847
	2901	9876		7939	6005		7422
	LBQ3	6590		6462	71ME		3277
	4786	5022		4248			8825
				7072			9569
				2286			1362
				2791			4378
				3376			4760
				6523			4595
				5481			2926
				4285			6931
				6609			2825
				7853			2512
				1642			5960
				4301			7577
				74LV			9921
				2353			7323
				6555			1041
				8220			9304
				8023		11EX	
				60JU			
				4241			
				9970			
				9624			
				bus384			
				6039			
				6051			
				5022			
				9734			
				5404			
8:15	Truck 346	7526		9803	4182		
	9028	JU		4044	3565		
	139 Dealer	7072		7048	4900		
	7105	j-7		9365	2498		

	7760		9365			5581	1196	
	bus178		7849			6736	8386	
			7072			7511	7760	
		UPP			UPP		6993	
		1ZB				5497	3274	
		bus123				3876		
						2602		
						5401		
						9365		
						6632		
						7390		
					36J2			
						4882		
						2851		
						3461		
						3333		
						9998		
						6163		
						1281		
8:30	2739		3871			1289	9057	
	9992		2230			6747	8382	
	dealer 386		7902			8476	4786	
	2553		2289		bus178		1363	
	8139	j-7				7169	EDB	
	52JL		6102			6278	5699	
	4182		3277		bus123		1954	
	8878		9635			3115		
	4729		7997	6MC	bus139			
	4327	81 Wheelchair			bus144			
			4241			1178		
						2562		
						7982		
						7997		
						7156		
						6776		
						5095		
						7542		
						5572		
						2353		
					14JX			
						2123		
					771JC			
						9471		
						7003		
						4265		
8:45	7517		3011			8858	9902	
	1330		8848			2777	7279	
	4786	bus179		5509		3340	59JY	
	5180		5283			7621	917JF	
	586 dealer		6741			6258	9653	
	MB		3159			181	8349	
	917	ME				716		
	9JY		4748			6597		
	9608					2854		
	6917					3367		
				5509		3618		
						8858		
						8663		5509
					74JV			
						8467		
						4158		
						1690		
						662		
						9151		
						5749		
						5180		
						5719		

LICENSE PLATE SURVEY - PM PEAK PERIOD

Camp Road to Southwestern Blvd
Southwestern Blvd to Camp Road

Camp Road/Howard Road

Time	NB Right	SB Left	EB Thru	WB Right	WB Left	WB Thru
4:00	9MC	4JC	5509	8859	2306	2606
	6660	9549		1618	6808	
	3557	4077		3998	1800	
	2928	4430		2735	8987	
	1862	2144		bus144	366JE	
	6260	1583		8689	2506A	
	9841	4241		512MB		
	5975	8854		7918		
	5229	7163		bus131		
	80JW	7509		7446		
	7263	2300		5959		
	5902	6734		51		
	739	1739				
		JC				
		JJ53				
4:15	1402	5993		514	3815	
	1972	8898		9650	bus135	
	3688	5045		1146	3406	
	9465	7897		6092	1550	
	3511	6068		81JV	5385	
	8372	2772		7923	7356	
	3266	9469		7239		
	1550	1594		7697		
	3162	5403		6410		
	2306	6776		9056		
	Dealer-6	1238		5341		
	6957	2656		9877		
	3800	SH21		3149		
	4433	6165		7602		
	7658	2MB		2144		
		5341				
		2988				
		7213				
		3925				
		4216				
		4530				
		9789				
		7466				
		9992				
4:30	2226	4661		8805	2778	
	3742	9586		3162	16439	
	5406	1251		1989	4662	
	2078	7697		497	7852	
	Bus115	1ME		8349	9756	
	2752	6749		2078	2662	
	4073	6358		8373	5238	
	9693	5048		6632		
	3366	6JC		47JL		
	6250	3035		4436		
	4110	1571		1573		
	9955	5382		4405		
	8303	9899		9245		
	2JL	7654		7267		
	Dealer	4255		5774		
		6211		9996		
		8373				
		2123				
		3908				
		4705				
		5268				
		4279				
		5774				
		9983				
4:45	6925	8JR		2534	3618	
	7617	8349		9635	4786	
	1411	2534		1821	7878	
	60JT	59JF		8079	9957	
	6912	5264		4526		
	5221	4553		60JT		
	JA	9575		1411		
	4622	9517		4452		
	9885	9381		7400		
	4265	5847		3312		
	7356	7668		9973		
	3258	1920		1365		
	6952	7528		1328		
	7874	6391				
	8821	8669				

Southwestern Boulevard/Howard Road

SB Left	SB Right	EB left	WB Right
1925	80JW	8383	4JMB
3132	8804	9218	2114
4671	2311	2840	8976
2488	1922	7264	3859
4728	9143	04JM	3998
4201	4982	1839	7661
8338	9885	5293	8211
4207	3541	6290	9027
1583	1972	1901	3136
24ME	6483	9304	4669
6260	1234	2397	1406
24NC	1902	2WTR	53MC
1775	3485	3433	5761
8658	3566	9042	4112
8382	4530	1462	6465
9454	40MB	9056	2331
SKES	6957	9955	4545
7263	8416	8343	2630
5902	3366	1110	4224
8702	16JC	2002	51
1307	6925	1362	5514
1591	8825	7384	97PK
4459	9955	5666	1146
1657	1402	8477	2864
9990	6678	1178	1971
4089	4026	7760	9382
LBOM	8173	9057	9185
9469	4559	3363	2087
5122	2401	4158	7993
4636	5666	8023	L587
9917	2457	3ORT	3331
09N1	1061	7232	6982
9170	6952	7448	6925
1730	53JB	2556	2420
439	6221	2708	8696
8079	1343	6092	5902
87RD	5403	9156	1225
6165	8028	4607	4401
2889	2241	1902	2241
3331	7335	3376	4452
3706	3586	69JF	3351
9789	6190	8439	9638
7568	5856	6121	4814
4451	8293	5064	7602
9457	7635	7048	8373
3375	7213	2675	3619
158L	6546	8674	8479
6523	4112	35J9	5063
3086	7625	5022	6475
5213	6732	3322	8658
7697	1031	3MVW	9952
4433	6237	OBCY	3532
2134	9517	7335	8343
8867	7162	2774	7990
1827	1958	1TEX	1591
4110	4571	7691	1083
9027	5734	1923	5753
8806	1796	7824	9178
HIFI	3599	6884	1796
3113	5933	7464	4061
7509	9236	7619	1573
6545	1775	5948	8867
7760	1015	2139	9245
6255	7422	2501	7558
5628	3557	3366	7267
3315	5206	2098	3321
2515	1328	6209	8079
8303	WCLR	8416	1593
9042	2230	7581	1402
9624	5115	RCE7	7923
7851	6439	5965	4459
5666	7308	1234	6555
3565	6358	2457	6190
2391	4158	7184	2889
6912	9231	9996	7400
9952	3207	66JE	3617
6734	9841	6514	7005
M-ROB		7343	7894

	6255	6082						9586		4471	2303
		2063						4705		1821	3312
5:00	5234	9068		5933	3859			59JF		5019	6573
	7641	7293	1FG		720					5238	3210
	6255	7688		9983	9588			4682		9351	WNY
	7742	7074		3791	8067			9301		9955	5020
	2401	8860		2163	6082			5863		5666	8195
	9756	7034		8373	1196			9517		8028	JB93
	8655	5908		9676				7668		4677	9170
	4786	40ME		4402				97PK		7173	9MLV
	3667	JC		7897				9518		1586	4622
	8047	1989		2163				3258		5674	3718
	1944	6805		7888				1465		8445	31FG
	6505	6519		9465				90JH		2936	5258
	7888	7232						4596		3972	2163
	5288	6005						1123		2936	6010
	2820	1328						7466		2934	1641
	1251	4281						4649		6086	9767
	2080	7KA						3841		5403	5070
	1829	3149						7923		20JU	8625
	7577	8NR						6981		4044	8537
	Bus152	3791						3228		8962	4588
		8801						RCE7		1402	3045
		2052						6884		7466	1718
5:15	4862	4526		6852	20JU			3905		1031	6483
	5711	7828		230	8595			4559		7213	2549
	7156	6223		7617	5814			5264		40MB	4424
	5373	2093		9471	6095			2087		5546	2163
	2544	bus155		1642	5221			9955		1716	74MD
	9325	7833		9325	9990			4929		31ME	7222
	1015	1954		4077	6255			8431		CTIC	9917
	1196	7621		2401	3908			8047		6678	7923
	3570	2704		9599				9535		8213	4671
	3859	5028		381				8860		7635	5594
	7678	2226		7323				4721		4571	4481
	39JY	2791		9968				7587		9436	D865
	7174	5933		3825				6865		53SB	5500
	7853	9968		9608				6282		1469	6605
	4112	7617		6791				2451		2391	CZAK
	9990	4882		7990				1592		9384	5734
	2241	5985						6066		3485	6021
	75MA	9789						4588		1598	5150
	3115							3972		7422	7317
	ME							6234		4982	1707
5:30	6910	6334		4279	1041			238M		5403	9599
	8431	5072	59JF		5500			5832		1808	3528
	8847	2532	35JR		7833			3508		9924	5199
	1580	7017		7526	5699			7232		49MB	1465
	3242	2289		7624	5213			2093		7833	4344
	2662	5095		7621				3521		3228	36JX
	7288	5213	WNY					1805		JS41	44JW
	49JU	7323		2704				6589		6493	1003
	3698	7169		5376				6505		5313	2515
	4124	9268		7827				4887			7752
	1104	381		3667				6019			9736
	732	8255		8293				6684			5671
		9998		9876				7661			5680
		6621		8870				4566			
		8780		3488				3347			
		9734						7678			
		5532						9450			
		1069						4112			
		8366						7017			
		2256						4334			
	5JP							4923			
		5380						73MA			
	8JV							4466			
		5527						4904			
		6051						7156			
		5627						8343			
		4134						1829			
5:45	4943	6526		9485	1753			4144			
	2125	1738		9087	6883			1307			
	8191	9187		4646	4327			9084			
	7308	6286		3138	8898			9752			
	8387	8663		7617	1954			2056			
	1949	4377		8383	8387			7024			
	1545	4042		1808	4424			2889			
	6684	5481		6637	7828			8113			
	1685	9998		2123	5384			L496			
	8894	9869		2125				8051			
		MG		4974				1083			
								2WTR			

9973
1365
6417
9158
1960
9JC
6039
9588
6632
1494
5830
4005
3784
5534
9705
2642
7979

5313

5380
7619
39JR
5594
18JV
1444
3115
8541
1902
8855
8427
49JC
1494
3343
2544
7760
2121
8479

A3

Level of Service: Criteria and Definitions

Level of Service Criteria

Highway Capacity Manual 2010

SIGNALIZED INTERSECTIONS

Level of Service is a qualitative measure describing operational conditions within a traffic stream, based on service measures such as speed and travel time, freedom to maneuver, traffic interruptions, comfort, and convenience. Level of Service for signalized intersections is defined in terms of delay specifically, average total delay per vehicle for a 15 minute analysis period. The ranges are as follows:

Level of Service	Control Delay per vehicle (seconds)
A	< 10
B	10 – 20
C	20 – 35
D	35 – 55
E	55 – 80
F	>80

UNSIGNALIZED INTERSECTIONS

Level of Service for unsignalized intersections is also defined in terms of delay. However, the delay criteria are different from a signalized intersection. The primary reason for this is driver expectation that a signalized intersection is designed to carry higher volumes than an unsignalized intersection. The total delay threshold for any given Level of Service is less for an unsignalized intersection than for a signalized intersection. The ranges are as follows:

Level of Service	Control Delay per vehicle (seconds)
A	< 10
B	10 – 15
C	15 – 25
D	25 – 35
E	35 - 50
F	>50

A4

Level of Service Calculations: Existing Conditions

Lane Group	EBL	EBT	EBR	WBL	WBT	WBR	NBL	NBT	NBR	SBL	SBT	SBR
Lane Configurations												
Volume (vph)	25	816	0	0	476	76	0	0	0	141	0	40
Ideal Flow (vphpl)	1900	1900	1900	1900	1900	1900	1900	1900	1900	1900	1900	1900
Storage Length (ft)	150		0	100		0	0		0	0		25
Storage Lanes	1		0	1		0	0		0	0		1
Taper Length (ft)	65			60			25			25		
Lane Util. Factor	1.00	0.95	0.95	1.00	0.95	0.95	1.00	1.00	1.00	1.00	1.00	1.00
Frt					0.979							0.850
Flt Protected	0.950										0.950	
Satd. Flow (prot)	1770	3539	0	1863	3465	0	0	1863	0	0	1770	1583
Flt Permitted	0.352										0.757	
Satd. Flow (perm)	656	3539	0	1863	3465	0	0	1863	0	0	1410	1583
Right Turn on Red			Yes			Yes			Yes			Yes
Satd. Flow (RTOR)					23							76
Link Speed (mph)		45			45			10			30	
Link Distance (ft)		785			910			184			1159	
Travel Time (s)		11.9			13.8			12.5			26.3	
Peak Hour Factor	0.90	0.90	0.90	0.89	0.89	0.89	0.92	0.92	0.92	0.86	0.86	0.86
Adj. Flow (vph)	28	907	0	0	535	85	0	0	0	164	0	47
Shared Lane Traffic (%)												
Lane Group Flow (vph)	28	907	0	0	620	0	0	0	0	0	164	47
Enter Blocked Intersection	No	No	No	No	No	No	No	No	No	No	No	No
Lane Alignment	Left	Left	Right	Left	Left	Right	Left	Left	Right	Left	Left	Right
Median Width(ft)		12			12			0			0	
Link Offset(ft)		0			0			0			0	
Crosswalk Width(ft)		16			16			16			16	
Two way Left Turn Lane		Yes			Yes							
Headway Factor	1.00	1.00	1.00	1.00	1.00	1.00	1.00	1.00	1.00	1.00	1.00	1.00
Turning Speed (mph)	15		9	15		9	15		9	15		9
Number of Detectors	1	2		1	2		1	2		1	2	1
Detector Template	Left	Thru		Left	Thru		Left	Thru		Left	Thru	Right
Leading Detector (ft)	20	100		20	100		20	100		20	100	20
Trailing Detector (ft)	0	0		0	0		0	0		0	0	0
Detector 1 Position(ft)	0	0		0	0		0	0		0	0	0
Detector 1 Size(ft)	20	6		20	6		20	6		20	6	20
Detector 1 Type	Cl+Ex	Cl+Ex		Cl+Ex	Cl+Ex		Cl+Ex	Cl+Ex		Cl+Ex	Cl+Ex	Cl+Ex
Detector 1 Channel												
Detector 1 Extend (s)	0.0	0.0		0.0	0.0		0.0	0.0		0.0	0.0	0.0
Detector 1 Queue (s)	0.0	0.0		0.0	0.0		0.0	0.0		0.0	0.0	0.0
Detector 1 Delay (s)	0.0	0.0		0.0	0.0		0.0	0.0		0.0	0.0	0.0
Detector 2 Position(ft)		94			94			94			94	
Detector 2 Size(ft)		6			6			6			6	
Detector 2 Type		Cl+Ex			Cl+Ex			Cl+Ex			Cl+Ex	
Detector 2 Channel												
Detector 2 Extend (s)		0.0			0.0			0.0			0.0	
Turn Type	pm+pt	NA		pm+pt	NA					Perm	NA	Perm
Protected Phases	1	6		5	2			3			3	
Permitted Phases	6			2			3			3		3
Detector Phase	1	6		5	2		3	3		3	3	3

Lane Group	EBL	EBT	EBR	WBL	WBT	WBR	NBL	NBT	NBR	SBL	SBT	SBR
Switch Phase												
Minimum Initial (s)	6.0	20.0		6.0	20.0		6.0	6.0		6.0	6.0	6.0
Minimum Split (s)	11.7	25.5		11.7	25.5		11.6	11.6		11.6	11.6	11.6
Total Split (s)	20.7	45.5		20.7	45.5		30.6	30.6		30.6	30.6	30.6
Total Split (%)	21.4%	47.0%		21.4%	47.0%		31.6%	31.6%		31.6%	31.6%	31.6%
Maximum Green (s)	15.0	41.5		15.0	41.5		25.0	25.0		25.0	25.0	25.0
Yellow Time (s)	4.7	3.5		4.7	3.5		3.2	3.2		3.2	3.2	3.2
All-Red Time (s)	1.0	0.5		1.0	0.5		2.4	2.4		2.4	2.4	2.4
Lost Time Adjust (s)	0.0	0.0		0.0	0.0			0.0			0.0	0.0
Total Lost Time (s)	5.7	4.0		5.7	4.0			5.6			5.6	5.6
Lead/Lag	Lead	Lag		Lead	Lag							
Lead-Lag Optimize?	Yes	Yes		Yes	Yes							
Vehicle Extension (s)	3.0	3.0		3.0	3.0		3.0	3.0		3.0	3.0	3.0
Recall Mode	Min	None		None	C-Max		None	None		None	None	None
Walk Time (s)		5.0			5.0		5.0	5.0		5.0	5.0	5.0
Flash Dont Walk (s)		11.0			11.0		11.0	11.0		11.0	11.0	11.0
Pedestrian Calls (#/hr)		0			0		0	0		0	0	0
Act Effct Green (s)	69.0	70.7			58.8						16.5	16.5
Actuated g/C Ratio	0.71	0.73			0.61						0.17	0.17
v/c Ratio	0.05	0.35			0.29						0.69	0.14
Control Delay	5.5	5.7			9.9						51.6	3.9
Queue Delay	0.0	0.0			0.0						0.0	0.0
Total Delay	5.5	5.7			9.9						51.6	3.9
LOS	A	A			A						D	A
Approach Delay		5.7			9.9						40.9	
Approach LOS		A			A						D	

Intersection Summary	
Area Type:	Other
Cycle Length: 96.8	
Actuated Cycle Length: 96.8	
Offset: 8 (8%), Referenced to phase 2:WBTL, Start of Green	
Natural Cycle: 55	
Control Type: Actuated-Coordinated	
Maximum v/c Ratio: 0.69	
Intersection Signal Delay: 11.4	Intersection LOS: B
Intersection Capacity Utilization 38.4%	ICU Level of Service A
Analysis Period (min) 15	

Splits and Phases: 1: Driving Range/Howard Road & Southwestern Blvd

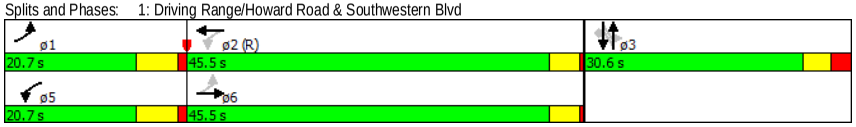

Two Way Analysis cannot be performed on Signalized Intersection.

Lane Group	EBL	EBT	EBR	WBL	WBT	WBR	NBL	NBT	NBR	SBL	SBT	SBR
Lane Configurations												
Volume (vph)	21	2	16	22	0	121	6	1305	23	45	539	1
Ideal Flow (vphpl)	1900	1900	1900	1900	1900	1900	1900	1900	1900	1900	1900	1900
Storage Length (ft)	90		0	100		0	80		0	80		0
Storage Lanes	1		0	1		0	1		0	1		0
Taper Length (ft)	45			65			65			65		
Lane Util. Factor	1.00	1.00	1.00	1.00	1.00	1.00	1.00	0.95	0.95	1.00	0.95	0.95
Frt		0.868			0.850			0.997				
Flt Protected	0.950			0.950			0.950			0.950		
Satd. Flow (prot)	1770	1617	0	1770	1583	0	1770	3529	0	1770	3539	0
Flt Permitted	0.950			0.950			0.950			0.950		
Satd. Flow (perm)	1770	1617	0	1770	1583	0	1770	3529	0	1770	3539	0
Link Speed (mph)		30			30			45			45	
Link Distance (ft)		273			310			818			719	
Travel Time (s)		6.2			7.0			12.4			10.9	
Peak Hour Factor	0.56	0.56	0.56	0.81	0.81	0.81	0.94	0.94	0.94	0.93	0.93	0.93
Adj. Flow (vph)	38	4	29	27	0	149	6	1388	24	48	580	1
Shared Lane Traffic (%)												
Lane Group Flow (vph)	38	33	0	27	149	0	6	1412	0	48	581	0
Enter Blocked Intersection	No	No	No	No	No	No	No	No	No	No	No	No
Lane Alignment	Left	Left	Right	Left	Left	Right	Left	Left	Right	Left	Left	Right
Median Width(ft)		12			12			12			12	
Link Offset(ft)		0			0			0			0	
Crosswalk Width(ft)		16			16			16			16	
Two way Left Turn Lane								Yes			Yes	
Headway Factor	1.00	1.00	1.00	1.00	1.00	1.00	1.00	1.00	1.00	1.00	1.00	1.00
Turning Speed (mph)	15		9	15		9	15		9	15		9
Sign Control		Stop			Stop			Free			Free	

Intersection Summary			
Area Type:	Other		
Control Type: Unsignalized			
Intersection Capacity Utilization 58.2%		ICU Level of Service B	
Analysis Period (min) 15			

Intersection	
Int Delay, s/veh	6.5

Movement	EBL	EBT	EBR	WBL	WBT	WBR	NBL	NBT	NBR	SBL	SBT	SBR
Vol, veh/h	21	2	16	22	0	121	6	1305	23	45	539	1
Conflicting Peds, #/hr	0	0	0	0	0	0	0	0	0	0	0	0
Sign Control	Stop	Stop	Stop	Stop	Stop	Stop	Free	Free	Free	Free	Free	Free
RT Channelized	-	-	None	-	-	None	-	-	None	-	-	None
Storage Length	90	-	-	100	-	-	80	-	-	80	-	-
Veh in Median Storage, #	-	0	-	-	0	-	-	0	-	-	0	-
Grade, %	-	0	-	-	0	-	-	0	-	-	0	-
Peak Hour Factor	56	56	56	81	81	81	94	94	94	93	93	93
Heavy Vehicles, %	2	2	2	2	2	2	2	2	2	2	2	2
Mvmt Flow	38	4	29	27	0	149	6	1388	24	48	580	1

Major/Minor	Minor2			Minor1			Major1			Major2		
Conflicting Flow All	1384	2103	290	1801	2090	706	581	0	0	1413	0	0
Stage 1	677	677	-	1413	1413	-	-	-	-	-	-	-
Stage 2	707	1426	-	388	677	-	-	-	-	-	-	-
Critical Hdwy	7.54	6.54	6.94	7.54	6.54	6.94	4.14	-	-	4.14	-	-
Critical Hdwy Stg 1	6.54	5.54	-	6.54	5.54	-	-	-	-	-	-	-
Critical Hdwy Stg 2	6.54	5.54	-	6.54	5.54	-	-	-	-	-	-	-
Follow-up Hdwy	3.52	4.02	3.32	3.52	4.02	3.32	2.22	-	-	2.22	-	-
Pot Cap-1 Maneuver	103	51	707	50	52	378	989	-	-	478	-	-
Stage 1	409	450	-	145	202	-	-	-	-	-	-	-
Stage 2	392	199	-	607	450	-	-	-	-	-	-	-
Platoon blocked, %								-	-		-	-
Mov Cap-1 Maneuver	57	46	707	42	46	378	989	-	-	478	-	-
Mov Cap-2 Maneuver	57	46	-	42	46	-	-	-	-	-	-	-
Stage 1	407	405	-	144	201	-	-	-	-	-	-	-
Stage 2	236	198	-	519	405	-	-	-	-	-	-	-

Approach	EB	WB	NB	SB
HCM Control Delay, s	89	46.4	0	1
HCM LOS	F	E		

Minor Lane/Major Mvmt	NBL	NBT	NBR	EBLn1	EBLn2	WBLn1	WBLn2	SBL	SBT	SBR
Capacity (veh/h)	989	-	-	57	272	42	378	478	-	-
HCM Lane V/C Ratio	0.006	-	-	0.658	0.118	0.647	0.395	0.101	-	-
HCM Control Delay (s)	8.7	-	-	148.1	20	188	20.6	13.4	-	-
HCM Lane LOS	A	-	-	F	C	F	C	B	-	-
HCM 95th %tile Q(veh)	0	-	-	2.7	0.4	2.4	1.8	0.3	-	-

Lane Group	EBL	EBT	EBR	WBL	WBT	WBR	NBL	NBT	NBR	SBL	SBT	SBR
Lane Configurations												
Volume (vph)	47	813	0	0	1122	109	0	0	0	87	0	38
Ideal Flow (vphpl)	1900	1900	1900	1900	1900	1900	1900	1900	1900	1900	1900	1900
Storage Length (ft)	150		0	100		0	0		0	0		25
Storage Lanes	1		0	1		0	0		0	0		1
Taper Length (ft)	65			60			25			25		
Lane Util. Factor	1.00	0.95	0.95	1.00	0.95	0.95	1.00	1.00	1.00	1.00	1.00	1.00
Frt					0.987							0.850
Flt Protected	0.950										0.950	
Satd. Flow (prot)	1770	3539	0	1863	3493	0	0	1863	0	0	1770	1583
Flt Permitted	0.144										0.757	
Satd. Flow (perm)	268	3539	0	1863	3493	0	0	1863	0	0	1410	1583
Right Turn on Red			Yes			Yes			Yes			Yes
Satd. Flow (RTOR)					13							76
Link Speed (mph)		45			45			10			30	
Link Distance (ft)		785			910			184			1159	
Travel Time (s)		11.9			13.8			12.5			26.3	
Peak Hour Factor	0.91	0.91	0.91	0.93	0.93	0.93	0.92	0.92	0.92	0.84	0.84	0.84
Adj. Flow (vph)	52	893	0	0	1206	117	0	0	0	104	0	45
Shared Lane Traffic (%)												
Lane Group Flow (vph)	52	893	0	0	1323	0	0	0	0	0	104	45
Enter Blocked Intersection	No	No	No	No	No	No	No	No	No	No	No	No
Lane Alignment	Left	Left	Right	Left	Left	Right	Left	Left	Right	Left	Left	Right
Median Width(ft)		12			12			0			0	
Link Offset(ft)		0			0			0			0	
Crosswalk Width(ft)		16			16			16			16	
Two way Left Turn Lane		Yes			Yes							
Headway Factor	1.00	1.00	1.00	1.00	1.00	1.00	1.00	1.00	1.00	1.00	1.00	1.00
Turning Speed (mph)	15		9	15		9	15		9	15		9
Number of Detectors	1	2		1	2		1	2		1	2	1
Detector Template	Left	Thru		Left	Thru		Left	Thru		Left	Thru	Right
Leading Detector (ft)	20	100		20	100		20	100		20	100	20
Trailing Detector (ft)	0	0		0	0		0	0		0	0	0
Detector 1 Position(ft)	0	0		0	0		0	0		0	0	0
Detector 1 Size(ft)	20	6		20	6		20	6		20	6	20
Detector 1 Type	Cl+Ex	Cl+Ex		Cl+Ex	Cl+Ex		Cl+Ex	Cl+Ex		Cl+Ex	Cl+Ex	Cl+Ex
Detector 1 Channel												
Detector 1 Extend (s)	0.0	0.0		0.0	0.0		0.0	0.0		0.0	0.0	0.0
Detector 1 Queue (s)	0.0	0.0		0.0	0.0		0.0	0.0		0.0	0.0	0.0
Detector 1 Delay (s)	0.0	0.0		0.0	0.0		0.0	0.0		0.0	0.0	0.0
Detector 2 Position(ft)		94			94			94			94	
Detector 2 Size(ft)		6			6			6			6	
Detector 2 Type		Cl+Ex			Cl+Ex			Cl+Ex			Cl+Ex	
Detector 2 Channel												
Detector 2 Extend (s)		0.0			0.0			0.0			0.0	
Turn Type	pm+pt	NA		pm+pt	NA					Perm	NA	Perm
Protected Phases	1	6		5	2			3			3	
Permitted Phases	6			2			3			3		3
Detector Phase	1	6		5	2		3	3		3	3	3

Lane Group	EBL	EBT	EBR	WBL	WBT	WBR	NBL	NBT	NBR	SBL	SBT	SBR
Switch Phase												
Minimum Initial (s)	6.0	20.0		6.0	20.0		6.0	6.0		6.0	6.0	6.0
Minimum Split (s)	11.7	25.5		11.7	25.5		11.6	11.6		11.6	11.6	11.6
Total Split (s)	20.7	45.5		20.7	45.5		30.6	30.6		30.6	30.6	30.6
Total Split (%)	21.4%	47.0%		21.4%	47.0%		31.6%	31.6%		31.6%	31.6%	31.6%
Maximum Green (s)	15.0	41.5		15.0	41.5		25.0	25.0		25.0	25.0	25.0
Yellow Time (s)	4.7	3.5		4.7	3.5		3.2	3.2		3.2	3.2	3.2
All-Red Time (s)	1.0	0.5		1.0	0.5		2.4	2.4		2.4	2.4	2.4
Lost Time Adjust (s)	0.0	0.0		0.0	0.0			0.0			0.0	0.0
Total Lost Time (s)	5.7	4.0		5.7	4.0			5.6			5.6	5.6
Lead/Lag	Lead	Lag		Lead	Lag							
Lead-Lag Optimize?	Yes	Yes		Yes	Yes							
Vehicle Extension (s)	3.0	3.0		3.0	3.0		3.0	3.0		3.0	3.0	3.0
Recall Mode	None	Min		None	C-Min		None	None		None	None	None
Walk Time (s)		5.0			5.0		5.0	5.0		5.0	5.0	5.0
Flash Dont Walk (s)		11.0			11.0		11.0	11.0		11.0	11.0	11.0
Pedestrian Calls (#/hr)		0			0		0	0		0	0	0
Act Effct Green (s)	75.6	78.1			68.3						12.5	12.5
Actuated g/C Ratio	0.78	0.81			0.71						0.13	0.13
v/c Ratio	0.17	0.31			0.54						0.57	0.17
Control Delay	5.0	3.8			10.4						51.3	4.3
Queue Delay	0.0	0.0			0.0						0.0	0.0
Total Delay	5.0	3.8			10.4						51.3	4.3
LOS	A	A			B						D	A
Approach Delay		3.9			10.4						37.1	
Approach LOS		A			B						D	

Intersection Summary			
Area Type:	Other		
Cycle Length: 96.8			
Actuated Cycle Length: 96.8			
Offset: 8 (8%), Referenced to phase 2:WBTL, Start of Green			
Natural Cycle: 60			
Control Type: Actuated-Coordinated			
Maximum v/c Ratio: 0.57			
Intersection Signal Delay: 9.5		Intersection LOS: A	
Intersection Capacity Utilization 52.1%		ICU Level of Service A	
Analysis Period (min) 15			

Splits and Phases: 1: Driving Range/Howard Road & Southwestern Blvd

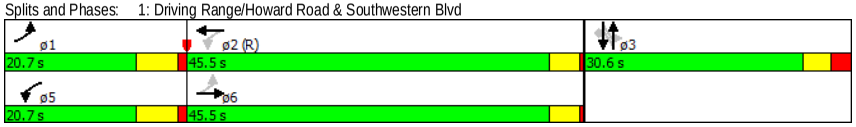

Two Way Analysis cannot be performed on Signalized Intersection.

Lane Group	EBL	EBT	EBR	WBL	WBT	WBR	NBL	NBT	NBR	SBL	SBT	SBR
Lane Configurations												
Volume (vph)	6	1	20	27	3	54	29	658	67	89	1244	16
Ideal Flow (vphpl)	1900	1900	1900	1900	1900	1900	1900	1900	1900	1900	1900	1900
Storage Length (ft)	90		0	100		0	80		0	80		0
Storage Lanes	1		0	1		0	1		0	1		0
Taper Length (ft)	45			65			65			65		
Lane Util. Factor	1.00	1.00	1.00	1.00	1.00	1.00	1.00	0.95	0.95	1.00	0.95	0.95
Frt		0.859			0.857			0.986			0.998	
Flt Protected	0.950			0.950			0.950			0.950		
Satd. Flow (prot)	1770	1600	0	1770	1596	0	1770	3490	0	1770	3532	0
Flt Permitted	0.950			0.950			0.950			0.950		
Satd. Flow (perm)	1770	1600	0	1770	1596	0	1770	3490	0	1770	3532	0
Link Speed (mph)		30			30			45			45	
Link Distance (ft)		273			310			818			719	
Travel Time (s)		6.2			7.0			12.4			10.9	
Peak Hour Factor	0.61	0.61	0.61	0.91	0.91	0.91	0.90	0.90	0.90	0.89	0.89	0.89
Adj. Flow (vph)	10	2	33	30	3	59	32	731	74	100	1398	18
Shared Lane Traffic (%)												
Lane Group Flow (vph)	10	35	0	30	62	0	32	805	0	100	1416	0
Enter Blocked Intersection	No	No	No	No	No	No	No	No	No	No	No	No
Lane Alignment	Left	Left	Right	Left	Left	Right	Left	Left	Right	Left	Left	Right
Median Width(ft)		12			12			12			12	
Link Offset(ft)		0			0			0			0	
Crosswalk Width(ft)		16			16			16			16	
Two way Left Turn Lane								Yes			Yes	
Headway Factor	1.00	1.00	1.00	1.00	1.00	1.00	1.00	1.00	1.00	1.00	1.00	1.00
Turning Speed (mph)	15		9	15		9	15		9	15		9
Sign Control		Stop			Stop			Free			Free	

Intersection Summary			
Area Type:	Other		
Control Type: Unsignalized			
Intersection Capacity Utilization 56.4%		ICU Level of Service B	
Analysis Period (min) 15			

Intersection	
Int Delay, s/veh	4.9

Movement	EBL	EBT	EBR	WBL	WBT	WBR	NBL	NBT	NBR	SBL	SBT	SBR
Vol, veh/h	6	1	20	27	3	54	29	658	67	89	1244	16
Conflicting Peds, #/hr	0	0	0	0	0	0	0	0	0	0	0	0
Sign Control	Stop	Stop	Stop	Stop	Stop	Stop	Free	Free	Free	Free	Free	Free
RT Channelized	-	-	None	-	-	None	-	-	None	-	-	None
Storage Length	90	-	-	100	-	-	80	-	-	80	-	-
Veh in Median Storage, #	-	0	-	-	0	-	-	0	-	-	0	-
Grade, %	-	0	-	-	0	-	-	0	-	-	0	-
Peak Hour Factor	61	61	61	91	91	91	90	90	90	89	89	89
Heavy Vehicles, %	2	2	2	2	2	2	2	2	2	2	2	2
Mvmt Flow	10	2	33	30	3	59	32	731	74	100	1398	18

Major/Minor	Minor2			Minor1			Major1			Major2		
Conflicting Flow All	2039	2477	708	1733	2449	403	1416	0	0	806	0	0
Stage 1	1607	1607	-	833	833	-	-	-	-	-	-	-
Stage 2	432	870	-	900	1616	-	-	-	-	-	-	-
Critical Hdwy	7.54	6.54	6.94	7.54	6.54	6.94	4.14	-	-	4.14	-	-
Critical Hdwy Stg 1	6.54	5.54	-	6.54	5.54	-	-	-	-	-	-	-
Critical Hdwy Stg 2	6.54	5.54	-	6.54	5.54	-	-	-	-	-	-	-
Follow-up Hdwy	3.52	4.02	3.32	3.52	4.02	3.32	2.22	-	-	2.22	-	-
Pot Cap-1 Maneuver	33	29	377	56	31	597	477	-	-	814	-	-
Stage 1	109	163	-	329	382	-	-	-	-	-	-	-
Stage 2	572	367	-	300	161	-	-	-	-	-	-	-
Platoon blocked, %								-	-		-	-
Mov Cap-1 Maneuver	23	24	377	42	25	597	477	-	-	814	-	-
Mov Cap-2 Maneuver	23	24	-	42	25	-	-	-	-	-	-	-
Stage 1	102	143	-	307	356	-	-	-	-	-	-	-
Stage 2	476	342	-	238	141	-	-	-	-	-	-	-

Approach	EB	WB	NB	SB
HCM Control Delay, s	74.1	80.2	0.5	0.7
HCM LOS	F	F		

Minor Lane/Major Mvmt	NBL	NBT	NBR	EBLn1	EBLn2	WBLn1	WBLn2	SBL	SBT	SBR
Capacity (veh/h)	477	-	-	23	222	42	271	814	-	-
HCM Lane V/C Ratio	0.068	-	-	0.428	0.155	0.706	0.231	0.123	-	-
HCM Control Delay (s)	13.1	-	-	248.9	24.2	202.5	22.2	10	-	-
HCM Lane LOS	B	-	-	F	C	F	C	B	-	-
HCM 95th %tile Q(veh)	0.2	-	-	1.3	0.5	2.7	0.9	0.4	-	-

A5

Level of Service Calculations: Background Conditions

Lane Group	EBL	EBT	EBR	WBL	WBT	WBR	NBL	NBT	NBR	SBL	SBT	SBR
Lane Configurations												
Volume (vph)	28	824	0	0	480	82	0	0	0	194	0	64
Ideal Flow (vphpl)	1900	1900	1900	1900	1900	1900	1900	1900	1900	1900	1900	1900
Storage Length (ft)	150		0	100		0	0		0	0		25
Storage Lanes	1		0	1		0	0		0	0		1
Taper Length (ft)	65			60			25			25		
Lane Util. Factor	1.00	0.95	0.95	1.00	0.95	0.95	1.00	1.00	1.00	1.00	1.00	1.00
Frt					0.978							0.850
Flt Protected	0.950										0.950	
Satd. Flow (prot)	1770	3539	0	1863	3461	0	0	1863	0	0	1770	1583
Flt Permitted	0.337										0.757	
Satd. Flow (perm)	628	3539	0	1863	3461	0	0	1863	0	0	1410	1583
Right Turn on Red			Yes			Yes			Yes			Yes
Satd. Flow (RTOR)					25							76
Link Speed (mph)		45			45			10			30	
Link Distance (ft)		785			910			184			1159	
Travel Time (s)		11.9			13.8			12.5			26.3	
Peak Hour Factor	0.90	0.90	0.90	0.89	0.89	0.89	0.92	0.92	0.92	0.86	0.86	0.86
Adj. Flow (vph)	31	916	0	0	539	92	0	0	0	226	0	74
Shared Lane Traffic (%)												
Lane Group Flow (vph)	31	916	0	0	631	0	0	0	0	0	226	74
Enter Blocked Intersection	No	No	No	No	No	No	No	No	No	No	No	No
Lane Alignment	Left	Left	Right	Left	Left	Right	Left	Left	Right	Left	Left	Right
Median Width(ft)		12			12			0			0	
Link Offset(ft)		0			0			0			0	
Crosswalk Width(ft)		16			16			16			16	
Two way Left Turn Lane		Yes			Yes							
Headway Factor	1.00	1.00	1.00	1.00	1.00	1.00	1.00	1.00	1.00	1.00	1.00	1.00
Turning Speed (mph)	15		9	15		9	15		9	15		9
Number of Detectors	1	2		1	2		1	2		1	2	1
Detector Template	Left	Thru		Left	Thru		Left	Thru		Left	Thru	Right
Leading Detector (ft)	20	100		20	100		20	100		20	100	20
Trailing Detector (ft)	0	0		0	0		0	0		0	0	0
Detector 1 Position(ft)	0	0		0	0		0	0		0	0	0
Detector 1 Size(ft)	20	6		20	6		20	6		20	6	20
Detector 1 Type	Cl+Ex	Cl+Ex		Cl+Ex	Cl+Ex		Cl+Ex	Cl+Ex		Cl+Ex	Cl+Ex	Cl+Ex
Detector 1 Channel												
Detector 1 Extend (s)	0.0	0.0		0.0	0.0		0.0	0.0		0.0	0.0	0.0
Detector 1 Queue (s)	0.0	0.0		0.0	0.0		0.0	0.0		0.0	0.0	0.0
Detector 1 Delay (s)	0.0	0.0		0.0	0.0		0.0	0.0		0.0	0.0	0.0
Detector 2 Position(ft)		94			94			94			94	
Detector 2 Size(ft)		6			6			6			6	
Detector 2 Type		Cl+Ex			Cl+Ex			Cl+Ex			Cl+Ex	
Detector 2 Channel												
Detector 2 Extend (s)		0.0			0.0			0.0			0.0	
Turn Type	pm+pt	NA		pm+pt	NA					Perm	NA	Perm
Protected Phases	1	6		5	2			3			3	
Permitted Phases	6			2			3			3		3
Detector Phase	1	6		5	2		3	3		3	3	3

Lane Group	EBL	EBT	EBR	WBL	WBT	WBR	NBL	NBT	NBR	SBL	SBT	SBR
Switch Phase												
Minimum Initial (s)	6.0	20.0		6.0	20.0		6.0	6.0		6.0	6.0	6.0
Minimum Split (s)	11.7	25.5		11.7	25.5		11.6	11.6		11.6	11.6	11.6
Total Split (s)	20.7	45.5		20.7	45.5		30.6	30.6		30.6	30.6	30.6
Total Split (%)	21.4%	47.0%		21.4%	47.0%		31.6%	31.6%		31.6%	31.6%	31.6%
Maximum Green (s)	15.0	41.5		15.0	41.5		25.0	25.0		25.0	25.0	25.0
Yellow Time (s)	4.7	3.5		4.7	3.5		3.2	3.2		3.2	3.2	3.2
All-Red Time (s)	1.0	0.5		1.0	0.5		2.4	2.4		2.4	2.4	2.4
Lost Time Adjust (s)	0.0	0.0		0.0	0.0			0.0			0.0	0.0
Total Lost Time (s)	5.7	4.0		5.7	4.0			5.6			5.6	5.6
Lead/Lag	Lead	Lag		Lead	Lag							
Lead-Lag Optimize?	Yes	Yes		Yes	Yes							
Vehicle Extension (s)	3.0	3.0		3.0	3.0		3.0	3.0		3.0	3.0	3.0
Recall Mode	Min	None		None	C-Max		None	None		None	None	None
Walk Time (s)		5.0			5.0		5.0	5.0		5.0	5.0	5.0
Flash Dont Walk (s)		11.0			11.0		11.0	11.0		11.0	11.0	11.0
Pedestrian Calls (#/hr)		0			0		0	0		0	0	0
Act Effct Green (s)	65.6	67.3			55.3						19.9	19.9
Actuated g/C Ratio	0.68	0.70			0.57						0.21	0.21
v/c Ratio	0.06	0.37			0.32						0.78	0.19
Control Delay	6.6	7.2			11.7						54.3	8.0
Queue Delay	0.0	0.0			0.0						0.0	0.0
Total Delay	6.6	7.2			11.7						54.3	8.0
LOS	A	A			B						D	A
Approach Delay		7.1			11.7						42.9	
Approach LOS		A			B						D	

Intersection Summary			
Area Type:	Other		
Cycle Length: 96.8			
Actuated Cycle Length: 96.8			
Offset: 8 (8%), Referenced to phase 2:WBTL, Start of Green			
Natural Cycle: 55			
Control Type: Actuated-Coordinated			
Maximum v/c Ratio: 0.78			
Intersection Signal Delay: 14.4		Intersection LOS: B	
Intersection Capacity Utilization 42.0%		ICU Level of Service A	
Analysis Period (min) 15			

Splits and Phases: 1: Driving Range/Howard Road & Southwestern Blvd

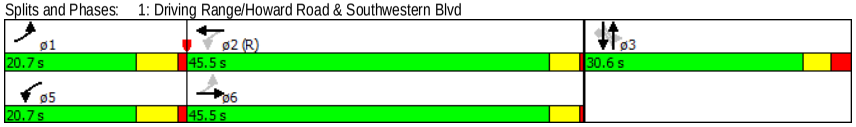

Two Way Analysis cannot be performed on Signalized Intersection.

Lane Group	EBL	EBT	EBR	WBL	WBT	WBR	NBL	NBT	NBR	SBL	SBT	SBR
Lane Configurations												
Volume (vph)	21	2	16	27	0	146	6	1318	28	62	544	1
Ideal Flow (vphpl)	1900	1900	1900	1900	1900	1900	1900	1900	1900	1900	1900	1900
Storage Length (ft)	90		0	100		0	80		0	80		0
Storage Lanes	1		0	1		0	1		0	1		0
Taper Length (ft)	45			65			65			65		
Lane Util. Factor	1.00	1.00	1.00	1.00	1.00	1.00	1.00	0.95	0.95	1.00	0.95	0.95
Frt		0.868			0.850			0.997				
Flt Protected	0.950			0.950			0.950			0.950		
Satd. Flow (prot)	1770	1617	0	1770	1583	0	1770	3529	0	1770	3539	0
Flt Permitted	0.950			0.950			0.950			0.950		
Satd. Flow (perm)	1770	1617	0	1770	1583	0	1770	3529	0	1770	3539	0
Link Speed (mph)		30			30			45			45	
Link Distance (ft)		273			310			818			719	
Travel Time (s)		6.2			7.0			12.4			10.9	
Peak Hour Factor	0.56	0.56	0.56	0.81	0.81	0.81	0.94	0.94	0.94	0.93	0.93	0.93
Adj. Flow (vph)	38	4	29	33	0	180	6	1402	30	67	585	1
Shared Lane Traffic (%)												
Lane Group Flow (vph)	38	33	0	33	180	0	6	1432	0	67	586	0
Enter Blocked Intersection	No	No	No	No	No	No	No	No	No	No	No	No
Lane Alignment	Left	Left	Right	Left	Left	Right	Left	Left	Right	Left	Left	Right
Median Width(ft)		12			12			12			12	
Link Offset(ft)		0			0			0			0	
Crosswalk Width(ft)		16			16			16			16	
Two way Left Turn Lane								Yes			Yes	
Headway Factor	1.00	1.00	1.00	1.00	1.00	1.00	1.00	1.00	1.00	1.00	1.00	1.00
Turning Speed (mph)	15		9	15		9	15		9	15		9
Sign Control		Stop			Stop			Free			Free	

Intersection Summary	
Area Type:	Other
Control Type: Unsignalized	
Intersection Capacity Utilization 66.5%	ICU Level of Service C
Analysis Period (min) 15	

Intersection	
Int Delay, s/veh	10.3

Movement	EBL	EBT	EBR	WBL	WBT	WBR	NBL	NBT	NBR	SBL	SBT	SBR
Vol, veh/h	21	2	16	27	0	146	6	1318	28	62	544	1
Conflicting Peds, #/hr	0	0	0	0	0	0	0	0	0	0	0	0
Sign Control	Stop	Stop	Stop	Stop	Stop	Stop	Free	Free	Free	Free	Free	Free
RT Channelized	-	-	None	-	-	None	-	-	None	-	-	None
Storage Length	90	-	-	100	-	-	80	-	-	80	-	-
Veh in Median Storage, #	-	0	-	-	0	-	-	0	-	-	0	-
Grade, %	-	0	-	-	0	-	-	0	-	-	0	-
Peak Hour Factor	56	56	56	81	81	81	94	94	94	93	93	93
Heavy Vehicles, %	2	2	2	2	2	2	2	2	2	2	2	2
Mvmt Flow	38	4	29	33	0	180	6	1402	30	67	585	1

Major/Minor	Minor2			Minor1			Major1			Major2		
Conflicting Flow All	1433	2164	293	1858	2149	716	586	0	0	1432	0	0
Stage 1	719	719	-	1430	1430	-	-	-	-	-	-	-
Stage 2	714	1445	-	428	719	-	-	-	-	-	-	-
Critical Hdwy	7.54	6.54	6.94	7.54	6.54	6.94	4.14	-	-	4.14	-	-
Critical Hdwy Stg 1	6.54	5.54	-	6.54	5.54	-	-	-	-	-	-	-
Critical Hdwy Stg 2	6.54	5.54	-	6.54	5.54	-	-	-	-	-	-	-
Follow-up Hdwy	3.52	4.02	3.32	3.52	4.02	3.32	2.22	-	-	2.22	-	-
Pot Cap-1 Maneuver	95	47	703	45	48	373	985	-	-	470	-	-
Stage 1	386	431	-	141	199	-	-	-	-	-	-	-
Stage 2	388	195	-	575	431	-	-	-	-	-	-	-
Platoon blocked, %								-	-		-	-
Mov Cap-1 Maneuver	44	40	703	36	41	373	985	-	-	470	-	-
Mov Cap-2 Maneuver	44	40	-	36	41	-	-	-	-	-	-	-
Stage 1	384	370	-	140	198	-	-	-	-	-	-	-
Stage 2	199	194	-	468	370	-	-	-	-	-	-	-

Approach	EB	WB	NB	SB
HCM Control Delay, s	135.9	65.5	0	1.4
HCM LOS	F	F		

Minor Lane/Major Mvmt	NBL	NBT	NBR	EBLn1	EBLn2	WBLn1	WBLn2	SBL	SBT	SBR
Capacity (veh/h)	985	-	-	44	247	36	373	470	-	-
HCM Lane V/C Ratio	0.006	-	-	0.852	0.13	0.926	0.483	0.142	-	-
HCM Control Delay (s)	8.7	-	-	233.8	21.7	293.1	23.4	13.9	-	-
HCM Lane LOS	A	-	-	F	C	F	C	B	-	-
HCM 95th %tile Q(veh)	0	-	-	3.4	0.4	3.4	2.5	0.5	-	-

Lane Group	EBL	EBT	EBR	WBL	WBT	WBR	NBL	NBT	NBR	SBL	SBT	SBR
Lane Configurations												
Volume (vph)	69	821	0	0	1133	164	0	0	0	100	0	45
Ideal Flow (vphpl)	1900	1900	1900	1900	1900	1900	1900	1900	1900	1900	1900	1900
Storage Length (ft)	150		0	100		0	0		0	0		25
Storage Lanes	1		0	1		0	0		0	0		1
Taper Length (ft)	65			60			25			25		
Lane Util. Factor	1.00	0.95	0.95	1.00	0.95	0.95	1.00	1.00	1.00	1.00	1.00	1.00
Frt					0.981							0.850
Flt Protected	0.950										0.950	
Satd. Flow (prot)	1770	3539	0	1863	3472	0	0	1863	0	0	1770	1583
Flt Permitted	0.121										0.757	
Satd. Flow (perm)	225	3539	0	1863	3472	0	0	1863	0	0	1410	1583
Right Turn on Red			Yes			Yes			Yes			Yes
Satd. Flow (RTOR)					21							76
Link Speed (mph)		45			45			10			30	
Link Distance (ft)		785			910			184			1159	
Travel Time (s)		11.9			13.8			12.5			26.3	
Peak Hour Factor	0.91	0.91	0.91	0.93	0.93	0.93	0.92	0.92	0.92	0.84	0.84	0.84
Adj. Flow (vph)	76	902	0	0	1218	176	0	0	0	119	0	54
Shared Lane Traffic (%)												
Lane Group Flow (vph)	76	902	0	0	1394	0	0	0	0	0	119	54
Enter Blocked Intersection	No	No	No	No	No	No	No	No	No	No	No	No
Lane Alignment	Left	Left	Right	Left	Left	Right	Left	Left	Right	Left	Left	Right
Median Width(ft)		12			12			0			0	
Link Offset(ft)		0			0			0			0	
Crosswalk Width(ft)		16			16			16			16	
Two way Left Turn Lane		Yes			Yes							
Headway Factor	1.00	1.00	1.00	1.00	1.00	1.00	1.00	1.00	1.00	1.00	1.00	1.00
Turning Speed (mph)	15		9	15		9	15		9	15		9
Number of Detectors	1	2		1	2		1	2		1	2	1
Detector Template	Left	Thru		Left	Thru		Left	Thru		Left	Thru	Right
Leading Detector (ft)	20	100		20	100		20	100		20	100	20
Trailing Detector (ft)	0	0		0	0		0	0		0	0	0
Detector 1 Position(ft)	0	0		0	0		0	0		0	0	0
Detector 1 Size(ft)	20	6		20	6		20	6		20	6	20
Detector 1 Type	Cl+Ex	Cl+Ex		Cl+Ex	Cl+Ex		Cl+Ex	Cl+Ex		Cl+Ex	Cl+Ex	Cl+Ex
Detector 1 Channel												
Detector 1 Extend (s)	0.0	0.0		0.0	0.0		0.0	0.0		0.0	0.0	0.0
Detector 1 Queue (s)	0.0	0.0		0.0	0.0		0.0	0.0		0.0	0.0	0.0
Detector 1 Delay (s)	0.0	0.0		0.0	0.0		0.0	0.0		0.0	0.0	0.0
Detector 2 Position(ft)		94			94			94			94	
Detector 2 Size(ft)		6			6			6			6	
Detector 2 Type		Cl+Ex			Cl+Ex			Cl+Ex			Cl+Ex	
Detector 2 Channel												
Detector 2 Extend (s)		0.0			0.0			0.0			0.0	
Turn Type	pm+pt	NA		pm+pt	NA					Perm	NA	Perm
Protected Phases	1	6		5	2			3			3	
Permitted Phases	6			2			3			3		3
Detector Phase	1	6		5	2		3	3		3	3	3

Lane Group	EBL	EBT	EBR	WBL	WBT	WBR	NBL	NBT	NBR	SBL	SBT	SBR
Switch Phase												
Minimum Initial (s)	6.0	20.0		6.0	20.0		6.0	6.0		6.0	6.0	6.0
Minimum Split (s)	11.7	25.5		11.7	25.5		11.6	11.6		11.6	11.6	11.6
Total Split (s)	20.7	45.5		20.7	45.5		30.6	30.6		30.6	30.6	30.6
Total Split (%)	21.4%	47.0%		21.4%	47.0%		31.6%	31.6%		31.6%	31.6%	31.6%
Maximum Green (s)	15.0	41.5		15.0	41.5		25.0	25.0		25.0	25.0	25.0
Yellow Time (s)	4.7	3.5		4.7	3.5		3.2	3.2		3.2	3.2	3.2
All-Red Time (s)	1.0	0.5		1.0	0.5		2.4	2.4		2.4	2.4	2.4
Lost Time Adjust (s)	0.0	0.0		0.0	0.0			0.0			0.0	0.0
Total Lost Time (s)	5.7	4.0		5.7	4.0			5.6			5.6	5.6
Lead/Lag	Lead	Lag		Lead	Lag							
Lead-Lag Optimize?	Yes	Yes		Yes	Yes							
Vehicle Extension (s)	3.0	3.0		3.0	3.0		3.0	3.0		3.0	3.0	3.0
Recall Mode	None	Min		None	C-Min		None	None		None	None	None
Walk Time (s)		5.0			5.0		5.0	5.0		5.0	5.0	5.0
Flash Dont Walk (s)		11.0			11.0		11.0	11.0		11.0	11.0	11.0
Pedestrian Calls (#/hr)		0			0		0	0		0	0	0
Act Effct Green (s)	72.0	73.7			63.4						13.5	13.5
Actuated g/C Ratio	0.74	0.76			0.65						0.14	0.14
v/c Ratio	0.27	0.33			0.61						0.61	0.19
Control Delay	6.5	4.5			12.6						51.5	5.8
Queue Delay	0.0	0.0			0.0						0.0	0.0
Total Delay	6.5	4.5			12.6						51.5	5.8
LOS	A	A			B						D	A
Approach Delay		4.6			12.6						37.2	
Approach LOS		A			B						D	

Intersection Summary			
Area Type:	Other		
Cycle Length: 96.8			
Actuated Cycle Length: 96.8			
Offset: 8 (8%), Referenced to phase 2:WBTL, Start of Green			
Natural Cycle: 60			
Control Type: Actuated-Coordinated			
Maximum v/c Ratio: 0.61			
Intersection Signal Delay: 11.2		Intersection LOS: B	
Intersection Capacity Utilization 59.8%		ICU Level of Service B	
Analysis Period (min) 15			

Splits and Phases: 1: Driving Range/Howard Road & Southwestern Blvd

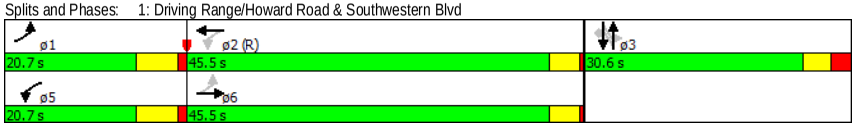

Two Way Analysis cannot be performed on Signalized Intersection.

Lane Group	EBL	EBT	EBR	WBL	WBT	WBR	NBL	NBT	NBR	SBL	SBT	SBR
Lane Configurations												
Volume (vph)	6	1	20	45	3	79	29	664	72	119	1256	16
Ideal Flow (vphpl)	1900	1900	1900	1900	1900	1900	1900	1900	1900	1900	1900	1900
Storage Length (ft)	90		0	100		0	80		0	80		0
Storage Lanes	1		0	1		0	1		0	1		0
Taper Length (ft)	45			65			65			65		
Lane Util. Factor	1.00	1.00	1.00	1.00	1.00	1.00	1.00	0.95	0.95	1.00	0.95	0.95
Frt		0.859			0.855			0.985			0.998	
Flt Protected	0.950			0.950			0.950			0.950		
Satd. Flow (prot)	1770	1600	0	1770	1593	0	1770	3486	0	1770	3532	0
Flt Permitted	0.950			0.950			0.950			0.950		
Satd. Flow (perm)	1770	1600	0	1770	1593	0	1770	3486	0	1770	3532	0
Link Speed (mph)		30			30			45			45	
Link Distance (ft)		273			310			818			719	
Travel Time (s)		6.2			7.0			12.4			10.9	
Peak Hour Factor	0.61	0.61	0.61	0.91	0.91	0.91	0.90	0.90	0.90	0.89	0.89	0.89
Adj. Flow (vph)	10	2	33	49	3	87	32	738	80	134	1411	18
Shared Lane Traffic (%)												
Lane Group Flow (vph)	10	35	0	49	90	0	32	818	0	134	1429	0
Enter Blocked Intersection	No	No	No	No	No	No	No	No	No	No	No	No
Lane Alignment	Left	Left	Right	Left	Left	Right	Left	Left	Right	Left	Left	Right
Median Width(ft)		12			12			12			12	
Link Offset(ft)		0			0			0			0	
Crosswalk Width(ft)		16			16			16			16	
Two way Left Turn Lane								Yes			Yes	
Headway Factor	1.00	1.00	1.00	1.00	1.00	1.00	1.00	1.00	1.00	1.00	1.00	1.00
Turning Speed (mph)	15		9	15		9	15		9	15		9
Sign Control		Stop			Stop			Free			Free	

Intersection Summary			
Area Type:	Other		
Control Type: Unsignalized			
Intersection Capacity Utilization 57.7%		ICU Level of Service B	
Analysis Period (min) 15			

Intersection	
Int Delay, s/veh	12.3

Movement	EBL	EBT	EBR	WBL	WBT	WBR	NBL	NBT	NBR	SBL	SBT	SBR
Vol, veh/h	6	1	20	45	3	79	29	664	72	119	1256	16
Conflicting Peds, #/hr	0	0	0	0	0	0	0	0	0	0	0	0
Sign Control	Stop	Stop	Stop	Stop	Stop	Stop	Free	Free	Free	Free	Free	Free
RT Channelized	-	-	None	-	-	None	-	-	None	-	-	None
Storage Length	90	-	-	100	-	-	80	-	-	80	-	-
Veh in Median Storage, #	-	0	-	-	0	-	-	0	-	-	0	-
Grade, %	-	0	-	-	0	-	-	0	-	-	0	-
Peak Hour Factor	61	61	61	91	91	91	90	90	90	89	89	89
Heavy Vehicles, %	2	2	2	2	2	2	2	2	2	2	2	2
Mvmt Flow	10	2	33	49	3	87	32	738	80	134	1411	18

Major/Minor	Minor2			Minor1			Major1			Major2		
Conflicting Flow All	2123	2570	715	1816	2539	409	1429	0	0	818	0	0
Stage 1	1688	1688	-	842	842	-	-	-	-	-	-	-
Stage 2	435	882	-	974	1697	-	-	-	-	-	-	-
Critical Hdwy	7.54	6.54	6.94	7.54	6.54	6.94	4.14	-	-	4.14	-	-
Critical Hdwy Stg 1	6.54	5.54	-	6.54	5.54	-	-	-	-	-	-	-
Critical Hdwy Stg 2	6.54	5.54	-	6.54	5.54	-	-	-	-	-	-	-
Follow-up Hdwy	3.52	4.02	3.32	3.52	4.02	3.32	2.22	-	-	2.22	-	-
Pot Cap-1 Maneuver	28	26	373	~ 49	27	592	472	-	-	806	-	-
Stage 1	97	148	-	325	378	-	-	-	-	-	-	-
Stage 2	570	362	-	270	147	-	-	-	-	-	-	-
Platoon blocked, %								-	-		-	-
Mov Cap-1 Maneuver	17	20	373	~ 35	21	592	472	-	-	806	-	-
Mov Cap-2 Maneuver	17	20	-	~ 35	21	-	-	-	-	-	-	-
Stage 1	90	123	-	303	352	-	-	-	-	-	-	-
Stage 2	449	337	-	203	123	-	-	-	-	-	-	-

Approach	EB	WB	NB	SB
HCM Control Delay, s	103.8	181.9	0.5	0.9
HCM LOS	F	F		

Minor Lane/Major Mvmt	NBL	NBT	NBR	EBLn1	EBLn2	WBLn1	WBLn2	SBL	SBT	SBR
Capacity (veh/h)	472	-	-	17	203	35	297	806	-	-
HCM Lane V/C Ratio	0.068	-	-	0.579	0.17	1.413	0.303	0.166	-	-
HCM Control Delay (s)	13.2	-	-	$ 375.2	26.3	$ 472.8	22.3	10.4	-	-
HCM Lane LOS	B	-	-	F	D	F	C	B	-	-
HCM 95th %tile Q(veh)	0.2	-	-	1.5	0.6	5.3	1.2	0.6	-	-

Notes

~: Volume exceeds capacity $: Delay exceeds 300s +: Computation Not Defined *: All major volume in platoon

A6

Level of Service Calculations: Full Development Conditions

Lane Group	EBL	EBT	EBR	WBL	WBT	WBR	NBL	NBT	NBR	SBL	SBT	SBR
Lane Configurations												
Volume (vph)	28	824	6	14	480	82	8	22	24	194	11	64
Ideal Flow (vphpl)	1900	1900	1900	1900	1900	1900	1900	1900	1900	1900	1900	1900
Storage Length (ft)	150		0	100		0	0		0	0		25
Storage Lanes	1		0	1		0	0		0	0		1
Taper Length (ft)	65			60			25			25		
Lane Util. Factor	1.00	0.95	0.95	1.00	0.95	0.95	1.00	1.00	1.00	1.00	1.00	1.00
Frt		0.999			0.978			0.940				0.850
Flt Protected	0.950			0.950				0.993			0.955	
Satd. Flow (prot)	1770	3536	0	1770	3461	0	0	1739	0	0	1779	1583
Flt Permitted	0.344			0.270				0.942			0.748	
Satd. Flow (perm)	641	3536	0	503	3461	0	0	1649	0	0	1393	1583
Right Turn on Red			Yes			Yes			Yes			Yes
Satd. Flow (RTOR)		1			25			30				76
Link Speed (mph)		45			45			10			30	
Link Distance (ft)		785			910			184			1159	
Travel Time (s)		11.9			13.8			12.5			26.3	
Peak Hour Factor	0.90	0.90	0.90	0.89	0.89	0.89	0.80	0.80	0.80	0.86	0.86	0.86
Adj. Flow (vph)	31	916	7	16	539	92	10	28	30	226	13	74
Shared Lane Traffic (%)												
Lane Group Flow (vph)	31	923	0	16	631	0	0	68	0	0	239	74
Enter Blocked Intersection	No	No	No	No	No	No	No	No	No	No	No	No
Lane Alignment	Left	Left	Right	Left	Left	Right	Left	Left	Right	Left	Left	Right
Median Width(ft)		12			12			0			0	
Link Offset(ft)		0			0			0			0	
Crosswalk Width(ft)		16			16			16			16	
Two way Left Turn Lane		Yes			Yes							
Headway Factor	1.00	1.00	1.00	1.00	1.00	1.00	1.00	1.00	1.00	1.00	1.00	1.00
Turning Speed (mph)	15		9	15		9	15		9	15		9
Number of Detectors	1	2		1	2		1	2		1	2	1
Detector Template	Left	Thru		Left	Thru		Left	Thru		Left	Thru	Right
Leading Detector (ft)	20	100		20	100		20	100		20	100	20
Trailing Detector (ft)	0	0		0	0		0	0		0	0	0
Detector 1 Position(ft)	0	0		0	0		0	0		0	0	0
Detector 1 Size(ft)	20	6		20	6		20	6		20	6	20
Detector 1 Type	Cl+Ex	Cl+Ex		Cl+Ex	Cl+Ex		Cl+Ex	Cl+Ex		Cl+Ex	Cl+Ex	Cl+Ex
Detector 1 Channel												
Detector 1 Extend (s)	0.0	0.0		0.0	0.0		0.0	0.0		0.0	0.0	0.0
Detector 1 Queue (s)	0.0	0.0		0.0	0.0		0.0	0.0		0.0	0.0	0.0
Detector 1 Delay (s)	0.0	0.0		0.0	0.0		0.0	0.0		0.0	0.0	0.0
Detector 2 Position(ft)		94			94			94			94	
Detector 2 Size(ft)		6			6			6			6	
Detector 2 Type		Cl+Ex			Cl+Ex			Cl+Ex			Cl+Ex	
Detector 2 Channel												
Detector 2 Extend (s)		0.0			0.0			0.0			0.0	
Turn Type	pm+pt	NA		pm+pt	NA		Perm	NA		Perm	NA	Perm
Protected Phases	1	6		5	2			3			3	
Permitted Phases	6			2			3			3		3
Detector Phase	1	6		5	2		3	3		3	3	3

Lane Group	EBL	EBT	EBR	WBL	WBT	WBR	NBL	NBT	NBR	SBL	SBT	SBR
Switch Phase												
Minimum Initial (s)	6.0	20.0		6.0	20.0		6.0	6.0		6.0	6.0	6.0
Minimum Split (s)	11.7	25.5		11.7	25.5		11.6	11.6		11.6	11.6	11.6
Total Split (s)	20.7	45.5		20.7	45.5		30.6	30.6		30.6	30.6	30.6
Total Split (%)	21.4%	47.0%		21.4%	47.0%		31.6%	31.6%		31.6%	31.6%	31.6%
Maximum Green (s)	15.0	41.5		15.0	41.5		25.0	25.0		25.0	25.0	25.0
Yellow Time (s)	4.7	3.5		4.7	3.5		3.2	3.2		3.2	3.2	3.2
All-Red Time (s)	1.0	0.5		1.0	0.5		2.4	2.4		2.4	2.4	2.4
Lost Time Adjust (s)	0.0	0.0		0.0	0.0			0.0			0.0	0.0
Total Lost Time (s)	5.7	4.0		5.7	4.0			5.6			5.6	5.6
Lead/Lag	Lead	Lag		Lead	Lag							
Lead-Lag Optimize?	Yes	Yes		Yes	Yes							
Vehicle Extension (s)	3.0	3.0		3.0	3.0		3.0	3.0		3.0	3.0	3.0
Recall Mode	Min	None		None	C-Max		None	None		None	None	None
Walk Time (s)		5.0			5.0		5.0	5.0		5.0	5.0	5.0
Flash Dont Walk (s)		11.0			11.0		11.0	11.0		11.0	11.0	11.0
Pedestrian Calls (#/hr)		0			0		0	0		0	0	0
Act Effct Green (s)	61.9	60.8		58.0	53.6			21.6			21.6	21.6
Actuated g/C Ratio	0.64	0.63		0.60	0.55			0.22			0.22	0.22
v/c Ratio	0.06	0.42		0.04	0.33			0.17			0.77	0.18
Control Delay	7.2	11.4		7.2	12.5			18.9			51.8	7.8
Queue Delay	0.0	0.0		0.0	0.0			0.0			0.0	0.0
Total Delay	7.2	11.4		7.2	12.5			18.9			51.8	7.8
LOS	A	B		A	B			B			D	A
Approach Delay		11.2			12.4			18.9			41.4	
Approach LOS		B			B			B			D	

Intersection Summary

Area Type: Other
Cycle Length: 96.8
Actuated Cycle Length: 96.8
Offset: 8 (8%), Referenced to phase 2:WBTL, Start of Green
Natural Cycle: 60
Control Type: Actuated-Coordinated
Maximum v/c Ratio: 0.77
Intersection Signal Delay: 16.6 — Intersection LOS: B
Intersection Capacity Utilization 49.3% — ICU Level of Service A
Analysis Period (min) 15

Splits and Phases: 1: Driving Range/Howard Road & Southwestern Blvd

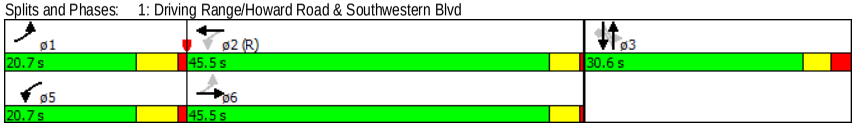

Two Way Analysis cannot be performed on Signalized Intersection.

Lane Group	EBL	EBT	EBR	WBL	WBT	WBR	NBL	NBT	NBR	SBL	SBT	SBR
Lane Configurations												
Volume (vph)	21	2	16	27	0	168	6	1318	28	73	544	1
Ideal Flow (vphpl)	1900	1900	1900	1900	1900	1900	1900	1900	1900	1900	1900	1900
Storage Length (ft)	90		0	100		0	80		0	80		0
Storage Lanes	1		0	1		0	1		0	1		0
Taper Length (ft)	45			65			65			65		
Lane Util. Factor	1.00	1.00	1.00	1.00	1.00	1.00	1.00	0.95	0.95	1.00	0.95	0.95
Frt		0.868			0.850			0.997				
Flt Protected	0.950			0.950			0.950			0.950		
Satd. Flow (prot)	1770	1617	0	1770	1583	0	1770	3529	0	1770	3539	0
Flt Permitted	0.950			0.950			0.950			0.950		
Satd. Flow (perm)	1770	1617	0	1770	1583	0	1770	3529	0	1770	3539	0
Link Speed (mph)		30			30			45			45	
Link Distance (ft)		273			310			818			719	
Travel Time (s)		6.2			7.0			12.4			10.9	
Peak Hour Factor	0.56	0.56	0.56	0.81	0.81	0.81	0.94	0.94	0.94	0.93	0.93	0.93
Adj. Flow (vph)	38	4	29	33	0	207	6	1402	30	78	585	1
Shared Lane Traffic (%)												
Lane Group Flow (vph)	38	33	0	33	207	0	6	1432	0	78	586	0
Enter Blocked Intersection	No	No	No	No	No	No	No	No	No	No	No	No
Lane Alignment	Left	Left	Right	Left	Left	Right	Left	Left	Right	Left	Left	Right
Median Width(ft)		12			12			12			12	
Link Offset(ft)		0			0			0			0	
Crosswalk Width(ft)		16			16			16			16	
Two way Left Turn Lane								Yes			Yes	
Headway Factor	1.00	1.00	1.00	1.00	1.00	1.00	1.00	1.00	1.00	1.00	1.00	1.00
Turning Speed (mph)	15		9	15		9	15		9	15		9
Sign Control		Stop			Stop			Free			Free	

Intersection Summary	
Area Type:	Other
Control Type: Unsignalized	
Intersection Capacity Utilization 68.4%	ICU Level of Service C
Analysis Period (min) 15	

Intersection	
Int Delay, s/veh	12.9

Movement	EBL	EBT	EBR	WBL	WBT	WBR	NBL	NBT	NBR	SBL	SBT	SBR
Vol, veh/h	21	2	16	27	0	168	6	1318	28	73	544	1
Conflicting Peds, #/hr	0	0	0	0	0	0	0	0	0	0	0	0
Sign Control	Stop	Stop	Stop	Stop	Stop	Stop	Free	Free	Free	Free	Free	Free
RT Channelized	-	-	None	-	-	None	-	-	None	-	-	None
Storage Length	90	-	-	100	-	-	80	-	-	80	-	-
Veh in Median Storage, #	-	0	-	-	0	-	-	0	-	-	0	-
Grade, %	-	0	-	-	0	-	-	0	-	-	0	-
Peak Hour Factor	56	56	56	81	81	81	94	94	94	93	93	93
Heavy Vehicles, %	2	2	2	2	2	2	2	2	2	2	2	2
Mvmt Flow	38	4	29	33	0	207	6	1402	30	78	585	1

Major/Minor	Minor2			Minor1			Major1			Major2		
Conflicting Flow All	1456	2187	293	1881	2173	716	586	0	0	1432	0	0
Stage 1	742	742	-	1430	1430	-	-	-	-	-	-	-
Stage 2	714	1445	-	451	743	-	-	-	-	-	-	-
Critical Hdwy	7.54	6.54	6.94	7.54	6.54	6.94	4.14	-	-	4.14	-	-
Critical Hdwy Stg 1	6.54	5.54	-	6.54	5.54	-	-	-	-	-	-	-
Critical Hdwy Stg 2	6.54	5.54	-	6.54	5.54	-	-	-	-	-	-	-
Follow-up Hdwy	3.52	4.02	3.32	3.52	4.02	3.32	2.22	-	-	2.22	-	-
Pot Cap-1 Maneuver	91	45	703	44	46	373	985	-	-	470	-	-
Stage 1	374	420	-	141	199	-	-	-	-	-	-	-
Stage 2	388	195	-	557	420	-	-	-	-	-	-	-
Platoon blocked, %								-	-		-	-
Mov Cap-1 Maneuver	~ 35	37	703	34	38	373	985	-	-	470	-	-
Mov Cap-2 Maneuver	~ 35	37	-	34	38	-	-	-	-	-	-	-
Stage 1	372	350	-	140	198	-	-	-	-	-	-	-
Stage 2	171	194	-	441	350	-	-	-	-	-	-	-

Approach	EB	WB	NB	SB
HCM Control Delay, s	197.5	67.2	0	1.7
HCM LOS	F	F		

Minor Lane/Major Mvmt	NBL	NBT	NBR	EBLn1	EBLn2	WBLn1	WBLn2	SBL	SBT	SBR
Capacity (veh/h)	985	-	-	35	234	34	373	470	-	-
HCM Lane V/C Ratio	0.006	-	-	1.071	0.137	0.98	0.556	0.167	-	-
HCM Control Delay (s)	8.7	-	-	$ 347.2	22.8	$ 322.6	26.1	14.2	-	-
HCM Lane LOS	A	-	-	F	C	F	D	B	-	-
HCM 95th %tile Q(veh)	0	-	-	3.9	0.5	3.5	3.2	0.6	-	-

Notes

~: Volume exceeds capacity $: Delay exceeds 300s +: Computation Not Defined *: All major volume in platoon

Lane Group	EBL	EBT	EBR	WBL	WBT	WBR	NBL	NBT	NBR	SBL	SBT	SBR
Lane Configurations												
Volume (vph)	69	821	12	26	1133	164	5	12	14	100	20	45
Ideal Flow (vphpl)	1900	1900	1900	1900	1900	1900	1900	1900	1900	1900	1900	1900
Storage Length (ft)	150		0	100		0	0		0	0		25
Storage Lanes	1		0	1		0	0		0	0		1
Taper Length (ft)	65			60			25			25		
Lane Util. Factor	1.00	0.95	0.95	1.00	0.95	0.95	1.00	1.00	1.00	1.00	1.00	1.00
Frt		0.998			0.981			0.938				0.850
Flt Protected	0.950			0.950				0.992			0.960	
Satd. Flow (prot)	1770	3532	0	1770	3472	0	0	1733	0	0	1788	1583
Flt Permitted	0.119			0.276				0.950			0.735	
Satd. Flow (perm)	222	3532	0	514	3472	0	0	1660	0	0	1369	1583
Right Turn on Red			Yes			Yes			Yes			Yes
Satd. Flow (RTOR)		2			21			18				76
Link Speed (mph)		45			45			10			30	
Link Distance (ft)		785			910			184			1159	
Travel Time (s)		11.9			13.8			12.5			26.3	
Peak Hour Factor	0.91	0.91	0.91	0.93	0.93	0.93	0.80	0.80	0.80	0.84	0.84	0.84
Adj. Flow (vph)	76	902	13	28	1218	176	6	15	18	119	24	54
Shared Lane Traffic (%)												
Lane Group Flow (vph)	76	915	0	28	1394	0	0	39	0	0	143	54
Enter Blocked Intersection	No	No	No	No	No	No	No	No	No	No	No	No
Lane Alignment	Left	Left	Right	Left	Left	Right	Left	Left	Right	Left	Left	Right
Median Width(ft)		12			12			0			0	
Link Offset(ft)		0			0			0			0	
Crosswalk Width(ft)		16			16			16			16	
Two way Left Turn Lane		Yes			Yes							
Headway Factor	1.00	1.00	1.00	1.00	1.00	1.00	1.00	1.00	1.00	1.00	1.00	1.00
Turning Speed (mph)	15		9	15		9	15		9	15		9
Number of Detectors	1	2		1	2		1	2		1	2	1
Detector Template	Left	Thru		Left	Thru		Left	Thru		Left	Thru	Right
Leading Detector (ft)	20	100		20	100		20	100		20	100	20
Trailing Detector (ft)	0	0		0	0		0	0		0	0	0
Detector 1 Position(ft)	0	0		0	0		0	0		0	0	0
Detector 1 Size(ft)	20	6		20	6		20	6		20	6	20
Detector 1 Type	Cl+Ex	Cl+Ex		Cl+Ex	Cl+Ex		Cl+Ex	Cl+Ex		Cl+Ex	Cl+Ex	Cl+Ex
Detector 1 Channel												
Detector 1 Extend (s)	0.0	0.0		0.0	0.0		0.0	0.0		0.0	0.0	0.0
Detector 1 Queue (s)	0.0	0.0		0.0	0.0		0.0	0.0		0.0	0.0	0.0
Detector 1 Delay (s)	0.0	0.0		0.0	0.0		0.0	0.0		0.0	0.0	0.0
Detector 2 Position(ft)		94			94			94			94	
Detector 2 Size(ft)		6			6			6			6	
Detector 2 Type		Cl+Ex			Cl+Ex			Cl+Ex			Cl+Ex	
Detector 2 Channel												
Detector 2 Extend (s)		0.0			0.0			0.0			0.0	
Turn Type	pm+pt	NA		pm+pt	NA		Perm	NA		Perm	NA	Perm
Protected Phases	1	6		5	2			3			3	
Permitted Phases	6			2			3			3		3
Detector Phase	1	6		5	2		3	3		3	3	3

Lane Group	EBL	EBT	EBR	WBL	WBT	WBR	NBL	NBT	NBR	SBL	SBT	SBR
Switch Phase												
Minimum Initial (s)	6.0	20.0		6.0	20.0		6.0	6.0		6.0	6.0	6.0
Minimum Split (s)	11.7	25.5		11.7	25.5		11.6	11.6		11.6	11.6	11.6
Total Split (s)	20.7	45.5		20.7	45.5		30.6	30.6		30.6	30.6	30.6
Total Split (%)	21.4%	47.0%		21.4%	47.0%		31.6%	31.6%		31.6%	31.6%	31.6%
Maximum Green (s)	15.0	41.5		15.0	41.5		25.0	25.0		25.0	25.0	25.0
Yellow Time (s)	4.7	3.5		4.7	3.5		3.2	3.2		3.2	3.2	3.2
All-Red Time (s)	1.0	0.5		1.0	0.5		2.4	2.4		2.4	2.4	2.4
Lost Time Adjust (s)	0.0	0.0		0.0	0.0			0.0			0.0	0.0
Total Lost Time (s)	5.7	4.0		5.7	4.0			5.6			5.6	5.6
Lead/Lag	Lead	Lag		Lead	Lag							
Lead-Lag Optimize?	Yes	Yes		Yes	Yes							
Vehicle Extension (s)	3.0	3.0		3.0	3.0		3.0	3.0		3.0	3.0	3.0
Recall Mode	None	Min		None	C-Min		None	None		None	None	None
Walk Time (s)		5.0			5.0		5.0	5.0		5.0	5.0	5.0
Flash Dont Walk (s)		11.0			11.0		11.0	11.0		11.0	11.0	11.0
Pedestrian Calls (#/hr)		0			0		0	0		0	0	0
Act Effct Green (s)	66.8	63.9		64.1	60.8			16.0			16.0	16.0
Actuated g/C Ratio	0.69	0.66		0.66	0.63			0.17			0.17	0.17
v/c Ratio	0.29	0.39		0.07	0.64			0.13			0.63	0.17
Control Delay	8.1	10.0		6.0	14.9			20.8			49.1	4.9
Queue Delay	0.0	0.0		0.0	0.0			0.0			0.0	0.0
Total Delay	8.1	10.0		6.0	14.9			20.8			49.1	4.9
LOS	A	B		A	B			C			D	A
Approach Delay		9.9			14.7			20.8			37.0	
Approach LOS		A			B			C			D	

Intersection Summary

Area Type: Other
Cycle Length: 96.8
Actuated Cycle Length: 96.8
Offset: 8 (8%), Referenced to phase 2:WBTL, Start of Green
Natural Cycle: 60
Control Type: Actuated-Coordinated
Maximum v/c Ratio: 0.64
Intersection Signal Delay: 14.6 — Intersection LOS: B
Intersection Capacity Utilization 67.6% — ICU Level of Service C
Analysis Period (min) 15

Splits and Phases: 1: Driving Range/Howard Road & Southwestern Blvd

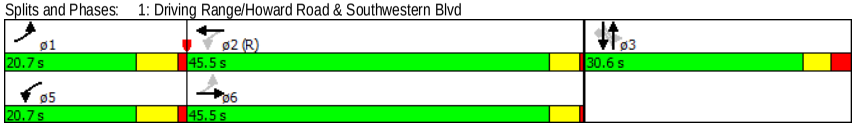

Two Way Analysis cannot be performed on Signalized Intersection.

Lane Group	EBL	EBT	EBR	WBL	WBT	WBR	NBL	NBT	NBR	SBL	SBT	SBR
Lane Configurations												
Volume (vph)	6	1	20	45	3	91	29	664	72	139	1256	16
Ideal Flow (vphpl)	1900	1900	1900	1900	1900	1900	1900	1900	1900	1900	1900	1900
Storage Length (ft)	90		0	100		0	80		0	80		0
Storage Lanes	1		0	1		0	1		0	1		0
Taper Length (ft)	45			65			65			65		
Lane Util. Factor	1.00	1.00	1.00	1.00	1.00	1.00	1.00	0.95	0.95	1.00	0.95	0.95
Frt		0.859			0.854			0.985			0.998	
Flt Protected	0.950			0.950			0.950			0.950		
Satd. Flow (prot)	1770	1600	0	1770	1591	0	1770	3486	0	1770	3532	0
Flt Permitted	0.950			0.950			0.950			0.950		
Satd. Flow (perm)	1770	1600	0	1770	1591	0	1770	3486	0	1770	3532	0
Link Speed (mph)		30			30			45			45	
Link Distance (ft)		273			310			818			719	
Travel Time (s)		6.2			7.0			12.4			10.9	
Peak Hour Factor	0.61	0.61	0.61	0.91	0.91	0.91	0.90	0.90	0.90	0.89	0.89	0.89
Adj. Flow (vph)	10	2	33	49	3	100	32	738	80	156	1411	18
Shared Lane Traffic (%)												
Lane Group Flow (vph)	10	35	0	49	103	0	32	818	0	156	1429	0
Enter Blocked Intersection	No	No	No	No	No	No	No	No	No	No	No	No
Lane Alignment	Left	Left	Right	Left	Left	Right	Left	Left	Right	Left	Left	Right
Median Width(ft)		12			12			12			12	
Link Offset(ft)		0			0			0			0	
Crosswalk Width(ft)		16			16			16			16	
Two way Left Turn Lane								Yes			Yes	
Headway Factor	1.00	1.00	1.00	1.00	1.00	1.00	1.00	1.00	1.00	1.00	1.00	1.00
Turning Speed (mph)	15		9	15		9	15		9	15		9
Sign Control		Stop			Stop			Free			Free	

Intersection Summary			
Area Type:	Other		
Control Type: Unsignalized			
Intersection Capacity Utilization 57.7%		ICU Level of Service B	
Analysis Period (min) 15			

Intersection	
Int Delay, s/veh	14.5

Movement	EBL	EBT	EBR	WBL	WBT	WBR	NBL	NBT	NBR	SBL	SBT	SBR
Vol, veh/h	6	1	20	45	3	91	29	664	72	139	1256	16
Conflicting Peds, #/hr	0	0	0	0	0	0	0	0	0	0	0	0
Sign Control	Stop	Stop	Stop	Stop	Stop	Stop	Free	Free	Free	Free	Free	Free
RT Channelized	-	-	None	-	-	None	-	-	None	-	-	None
Storage Length	90	-	-	100	-	-	80	-	-	80	-	-
Veh in Median Storage, #	-	0	-	-	0	-	-	0	-	-	0	-
Grade, %	-	0	-	-	0	-	-	0	-	-	0	-
Peak Hour Factor	61	61	61	91	91	91	90	90	90	89	89	89
Heavy Vehicles, %	2	2	2	2	2	2	2	2	2	2	2	2
Mvmt Flow	10	2	33	49	3	100	32	738	80	156	1411	18

Major/Minor	Minor2			Minor1			Major1			Major2		
Conflicting Flow All	2168	2615	715	1861	2584	409	1429	0	0	818	0	0
Stage 1	1733	1733	-	842	842	-	-	-	-	-	-	-
Stage 2	435	882	-	1019	1742	-	-	-	-	-	-	-
Critical Hdwy	7.54	6.54	6.94	7.54	6.54	6.94	4.14	-	-	4.14	-	-
Critical Hdwy Stg 1	6.54	5.54	-	6.54	5.54	-	-	-	-	-	-	-
Critical Hdwy Stg 2	6.54	5.54	-	6.54	5.54	-	-	-	-	-	-	-
Follow-up Hdwy	3.52	4.02	3.32	3.52	4.02	3.32	2.22	-	-	2.22	-	-
Pot Cap-1 Maneuver	26	24	373	~ 45	25	592	472	-	-	806	-	-
Stage 1	91	141	-	325	378	-	-	-	-	-	-	-
Stage 2	570	362	-	254	139	-	-	-	-	-	-	-
Platoon blocked, %								-	-		-	-
Mov Cap-1 Maneuver	15	18	373	~ 31	19	592	472	-	-	806	-	-
Mov Cap-2 Maneuver	15	18	-	~ 31	19	-	-	-	-	-	-	-
Stage 1	85	114	-	303	352	-	-	-	-	-	-	-
Stage 2	437	337	-	184	112	-	-	-	-	-	-	-

Approach	EB	WB	NB	SB
HCM Control Delay, s	120.4	201.2	0.5	1
HCM LOS	F	F		

Minor Lane/Major Mvmt	NBL	NBT	NBR	EBLn1	EBLn2	WBLn1	WBLn2	SBL	SBT	SBR
Capacity (veh/h)	472	-	-	15	192	31	302	806	-	-
HCM Lane V/C Ratio	0.068	-	-	0.656	0.179	1.595	0.342	0.194	-	-
HCM Control Delay (s)	13.2	-	-	$ 444.7	27.8	$ 573.3	23	10.5	-	-
HCM Lane LOS	B	-	-	F	D	F	C	B	-	-
HCM 95th %tile Q(veh)	0.2	-	-	1.6	0.6	5.6	1.5	0.7	-	-

Notes

~: Volume exceeds capacity $: Delay exceeds 300s +: Computation Not Defined *: All major volume in platoon